SC360 System Controller

Installation Guide

Model TSYS2C60A2VVU

APPLY PASSWORD LABEL HERE

With Link technology

ALL phases of this installation must comply with NATIONAL, STATE AND LOCAL CODES

IMPORTANT — This Document is customer property and is to remain with this unit.

These instructions do not cover all variations in systems or provide for every possible contingency to be met in connection with the installation. Should further information be desired or should particular problems arise which are not covered sufficiently for the purchaser's purposes, the matter should be referred to your installing dealer or local distributor.

18-HD95D1-1E-EN

Contents

1. Safety **2**
2. Product Specifications **3**
3. General Information **3**
3.1 What's in the Box? 3
3.2 Accessories 3
3.3 Software Updates 3
4. Trane® & American Standard® Link Systems **4**
5. Placement & Installation **5**
5.1 Location In Controlled Space 5
5.2 Network Connections 6
5.3 Mounting 6
5.4 Wiring 7
5.5 Trane & American Standard Link Low Voltage Wire Connectors 7
6. Field Wiring Connection Diagram Options **8**
7. CAN Low Voltage Troubleshooting **9**
8. Button/LED Functions **10**
9. Offline Over The Air Upgrades **11**
10. SC360 Notices **14**

1. Safety

NOTE: Use 18-gauge color-coded thermostat cable for proper wiring. Shielded cable is not typically required.

Keep this wiring at least one foot away from large inductive loads such as Electronic Air Cleaners, motors, line starters, lighting ballasts and large distribution panels.

Failure to follow these wiring practices may introduce electrical interference (noise) which can cause erratic system operation.

All unused thermostat wires should be grounded at indoor unit chassis ground only. Shielded cable may be required if the above wiring guidelines cannot be met. Ground only one end of the shield to the system chassis.

⚠ WARNING

This information is intended for use by individuals possessing adequate backgrounds of electrical and mechanical experience. Any attempt to repair a central air conditioning product may result in personal injury and/or property damage. The manufacturer or seller cannot be responsible for the interpretation of this information, nor can it assume any liability in connection with its use.

⚠ WARNING

LIVE ELECTRICAL COMPONENTS!

During installation, testing, servicing, and troubleshooting of this product, it may be necessary to work with live electrical components. Failure to follow all electrical safety precautions when exposed to live electrical components could result in death or serious injury.

VALLEY CLIMA ESPECIALIZADO

2. Product Specifications

SPECIFICATION	DESCRIPTION
Model	TSYS2C60A2VVU
Product	SC360 System Controller
Size	5.55” x 4.54” x 1” (WxHxD)
Configurations	Heat Pump, Heat/Cool, Dual Fuel, Heat Only, Cooling Only
Maximum Number of Stages	5 Stages Heat, 2 Stages Cooling
Storage Temperature	-40°F to +176°F, 0-95% RH non-condensing
Operating Temperature	-10°F to +145°F, 0-60% RH non-condensing
Input Power*	24VAC from HVAC System (Range: 18-30 VAC)
Power Consumption	3W (typical) / 4.7W (max)
Wire Usage	18 AWG NEC approved control wiring
Communications	Controller Area Network (CAN bus) 4-wire connection Wi-Fi 802.11b/g/n Bluetooth Low-Energy
System Modes	Auto, Heating, Cooling, Off, Emergency Heat
Fan Modes	Auto, On, Circulate
Cooling Setpoint Temperature Range	60°F to 99°F, 1°F resolution
Heating Setpoint Temperature Range	55°F to 90°F, 1°F resolution
Outdoor Temperature Display Range	Ambient Temperature: -40°F to 141°F (including dead band), -38°F to 132°F (excluding dead band) External Ambient Temperature: up to 136°F
Indoor Humidity Display Range	0% to 100%, 1% resolution
Minimum Cycle Off Time Delay	Compressor: 5 minutes, Indoor Heat: 1 minute

* On every application, 24VAC loads should be reviewed to be sure the indoor unit control power transformer is adequately sized.

3. General Information

3.1 What’s in the Box?

- Literature
  - Installer Guide
  - Warranty Card
- SC360 System Controller
- Wall Plate
- CAN Distribution Board
- CAN Connector Pack
- 2 ft. Harness
- 6 ft. Harness
- Mounting Kit
- Duct Sensor Kit

3.2 Accessories

- Wired Indoor Sensor (ZZSENSAL0400AA)
- Wireless Indoor Sensor (ZSENS930AW00MA*)

* Wireless Indoor Sensor software version 1.70 or greater is required.

3.3 Software Updates

To take full advantage of the features and benefits of the SC360 System Controller, the latest software revision should be installed.

An internet connection is required for software updates. When the SC360 is connected to the Internet, software updates will occur automatically and do not require user intervention.

4. Trane® & American Standard® Link Systems

- **Installation.** Trane and American Standard Link systems are built to be “plug and play”. Once you’ve connected the outdoor unit, indoor unit, SC360, and UX360, turn on the system. The equipment will communicate and configure the system automatically to default settings.
- **Verification.** You can easily verify all modes of operation. Link can run and verify each mode of operation as well as verify the system is functioning properly. For example, instruct the system to deliver 1200 CFM of airflow, and the system will verify correct operation. Once testing has been completed, you can get a commissioning report that documents the results.
- **Monitoring.** With a homeowner’s permission, you can monitor data from the system remotely. This includes creating a birth certificate that captures how the system was operating on day one, and tracking performance over time.
- **Upgrades.** Connected systems can have their software remotely upgraded through the SC360, including pushing additional features out to the installed communicating equipment. No dealer visit or SD cards are required.

Technical Advantages

- Self-configuring system on startup
- Automated verification simplifies charging and airflow procedures, and automatically goes through all modes of operation to verify the system is operating properly and within specifications
- New sensors to easily monitor data, with information shared wirelessly, either onsite or in the cloud
- Standardized and consistent wiring: four-wire connection for all communicating equipment simplifies installation
- Faster, more robust communication protocol
- SC360 controls all system decisions, and has Temperature and Humidity sensing capabilities as well as Wi-Fi and BLE communications on-board.
- Remotely control connected systems from the Home mobile app.
- The system supports up to four indoor temperature and humidity sensors in a non-zoned system for averaging, including ZSENS930AW00MA sensors.

Download the Trane Diagnostics or American Standard Diagnostics mobile app from the Google Play™ Store or App Store®.

All trademarks referenced are the trademarks of their respective owners. Google is a trademark of Google LLC.

5. Placement & Installation

5.1 Location In Controlled Space

The SC360 is not required to be installed in a controlled space. However, if the SC360 is located in a controlled space, install it in a centrally located climate controlled living space with good air circulation and follow the guidelines below.

- In order for the SC360 to be assigned as an indoor temperature and humidity sensor, it must be installed in a controlled space.

  NOTE: See the UX360 Installer Guide for details on how to configure the SC360 for a controlled space and assign it as an indoor temperature and humidity sensor.
- The SC360 **MUST** be at least 3 feet apart from any other electronic device such as a TV or speaker.
- If the SC360 is not within the controlled space you MUST assign an indoor temperature sensor that is installed in a controlled space. See the UX360 Installer Guide for details.
- If the UX360 and the SC360 must be in close proximity (closer than 3 feet), always install the UX360 diagonally above the SC360. If top left and top right sides are not possible, then install the SC360 to the right or left side of the UX360.
- Keep these 2 devices as far apart as possible. **Never install them on top of each other.**
- The SC360 should be at least 3 feet away from a corner where 2 walls meet. Corners have poor circulation.
- The SC360 should not be directly exposed to air currents from supply air or ceiling fans.
- Avoid exposing the SC360 to any radiant heat source such as sun light or fireplaces.

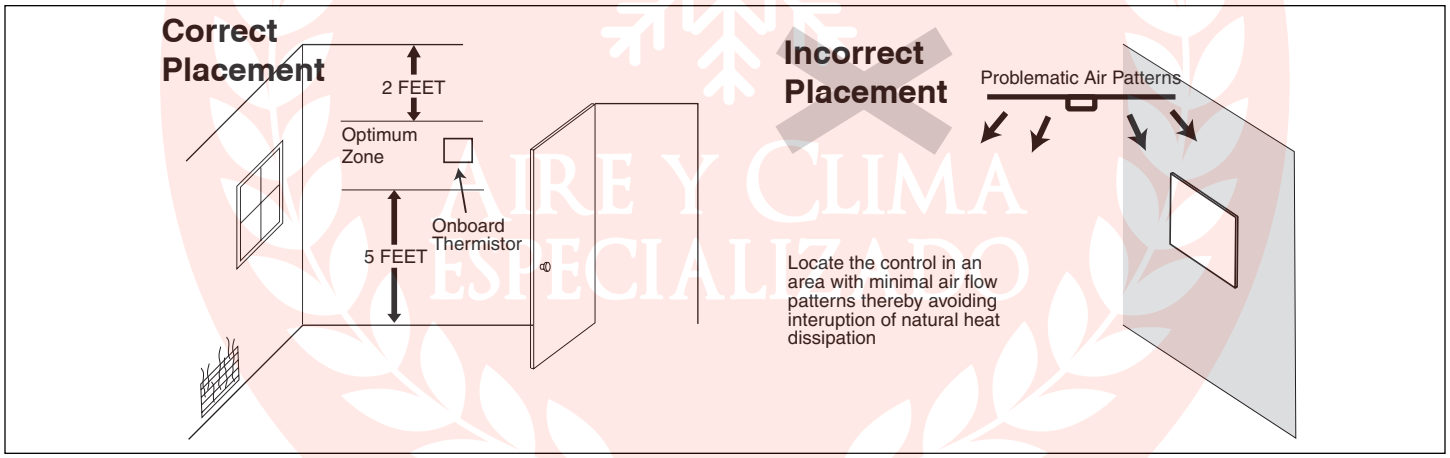

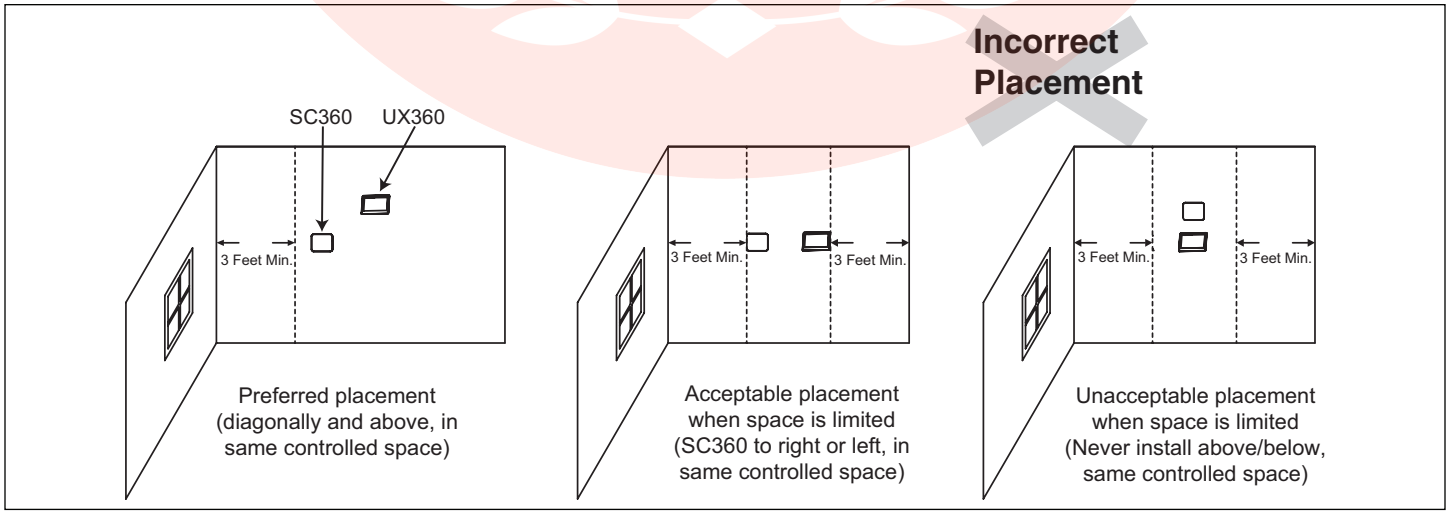

Figure 1. Placement of SC360

AIRE Y CLIMA ESPECIALIZADO

5.2 Network Connections

To take advantage of the full range of features on the SC360, it should be connected to the Internet using a wireless connection.

If the SC360 will be connected to the Internet using the built-in wireless feature, choose a mounting location that ensures adequate signal strength from the wireless router.

Tips to Help Maximize Signal Strength:

- Mount the SC360 within 30 feet of the wireless router.
- Install the SC360 with no more than three interior walls between it and the router.
- Install the SC360 where electromagnetic emissions from other devices, appliances, and wiring cannot interfere with the wireless communication.
- Install the SC360 in open areas, not near metal objects or near structures (i.e. doors, appliances, entertainment centers or shelving units).
- Install the SC360 further than two inches away from any pipes, duct work or other metal obstructions.
- Install the SC360 in an area with minimized metal obstructions and concrete or brick walls between the SC360 and the wireless router.

Refer to the UX360 User Guide for additional information on connecting to the Internet.

5.3 Mounting

Follow these steps to mount the SC360 to the wall. See Figures 2 and 3.

1. Turn OFF all power to heating and cooling equipment.
2. Route the wires through the opening on the Sub-base.
3. Place the Sub-base against the wall in the desired location and mark the wall through the center of each mounting hole.
4. Drill the holes in the wall where marked.
5. Mount the Sub-base to the wall using included mounting screws and drywall anchors. Make sure all wires extend through the Sub-base.

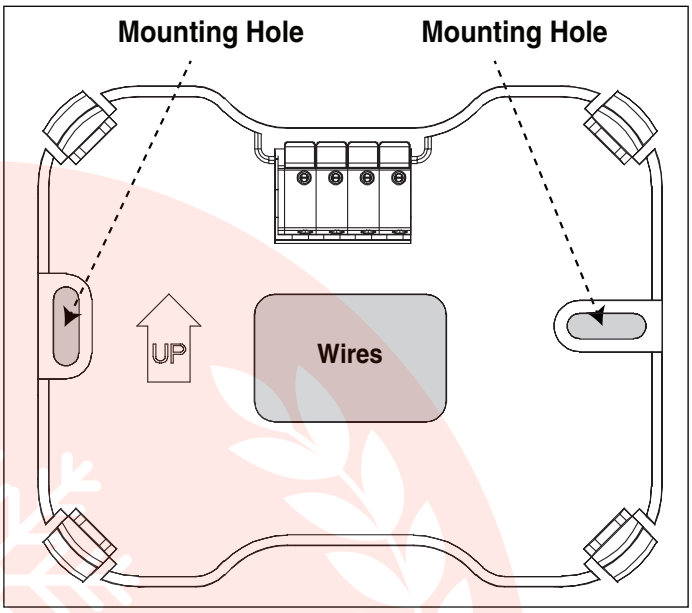

Figure 2. Mark The Mounting Holes

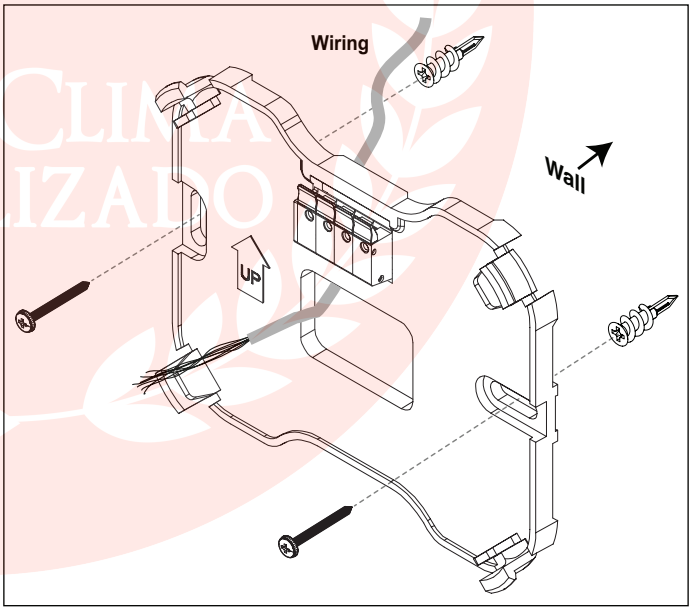

Figure 3. Mount The Sub-Base To The Wall

AIRE Y CLIMA ESPECIALIZADO

5.4 Wiring

For ease of installation, the SC360 comes with a CAN connector pack and has two wiring options. There is a wire connector located in the middle, back of the unit and another one at the front, bottom of the unit.

When installing the SC360 using the wall Sub-base and back connector, follow the steps below. The instructions in Section 5.5 are for the CAN connector pack and use with the SC360 bottom connector only.

1. Adjust the length and position of each wire to reach the proper terminal on the connector block of the Sub-base. Strip 1/4” of insulation from each wire. Do not allow adjacent wires to short together when connected. If stranded thermostat cable is used, one or more strands will have to be cut to allow the cable to fit connector. For use with solid conductor 18 ga. thermostat wire.
2. Match and connect control wires to the proper terminals on the connector block.

   Refer to the Field Wiring Connection Diagrams shown later in this document.
3. Push excess wire back into the wall and seal the hole to prevent air leaks.

   NOTE: Air Leaks in the wall behind the SC360 can cause improper operation.
4. Attach the SC360 to the Sub-base.
5. Turn ON power to the heating and cooling equipment.

5.5 Trane & American Standard Link Low Voltage Wire Connectors

Link mode uses simple connectors for low voltage connections. These connections are color coded which makes the installation easier and quicker.

Wire Colors	
R	Red
DH	White
DL	Green
B	Blue

Do the following to make the connections from the actual thermostat wire to the connector.

NOTE: These connectors are necessary at the communicating outdoor unit, communicating indoor unit, distribution board(s), system controller and communicating accessories.

1. Strip the Red, White, Green and Blue thermostat wires back 1/4”.
2. Insert the wires into the connector in the correctly colored locations.
3. **When you feel it release, allow each wire to slide in further.**
4. Pull back on the wires individually and slightly and check if the wires are seated properly. If each wire does not pull out for all four wires, the connection is complete.
5. Connectors are ONE-TIME-USE ONLY. If the thermostat wire gets broken off inside of the connector, the connector must be replaced. If a wire color gets inserted into the wrong connector position, it may be possible to work the wire back out of the connector.

   DO NOT REUSE THE CONNECTOR – REPLACE IT INSTEAD.
6. Wire colors are for illustration purposes only. If using a different color, ensure it lands at the correct terminal throughout all of the communicating control wiring.

Connect the CAN connector into the male coupling on the low voltage harness at the Outdoor unit.

The air handler has two dedicated CAN Connector headers on the Air Handler Control (AHC) board. In Link communicating mode, both of them are in the communicating loop. It does not matter which one goes to the thermostat, System Controller, distribution board, outdoor unit or any other Link accessory.

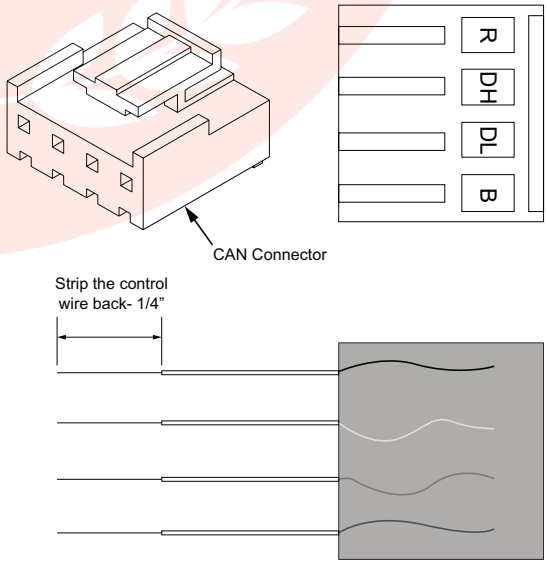

NOTE: For use with 18 ga. solid core thermostat wire.

6. Field Wiring Connection Diagram Options

COMMUNICATING INDOOR AND OUTDOOR

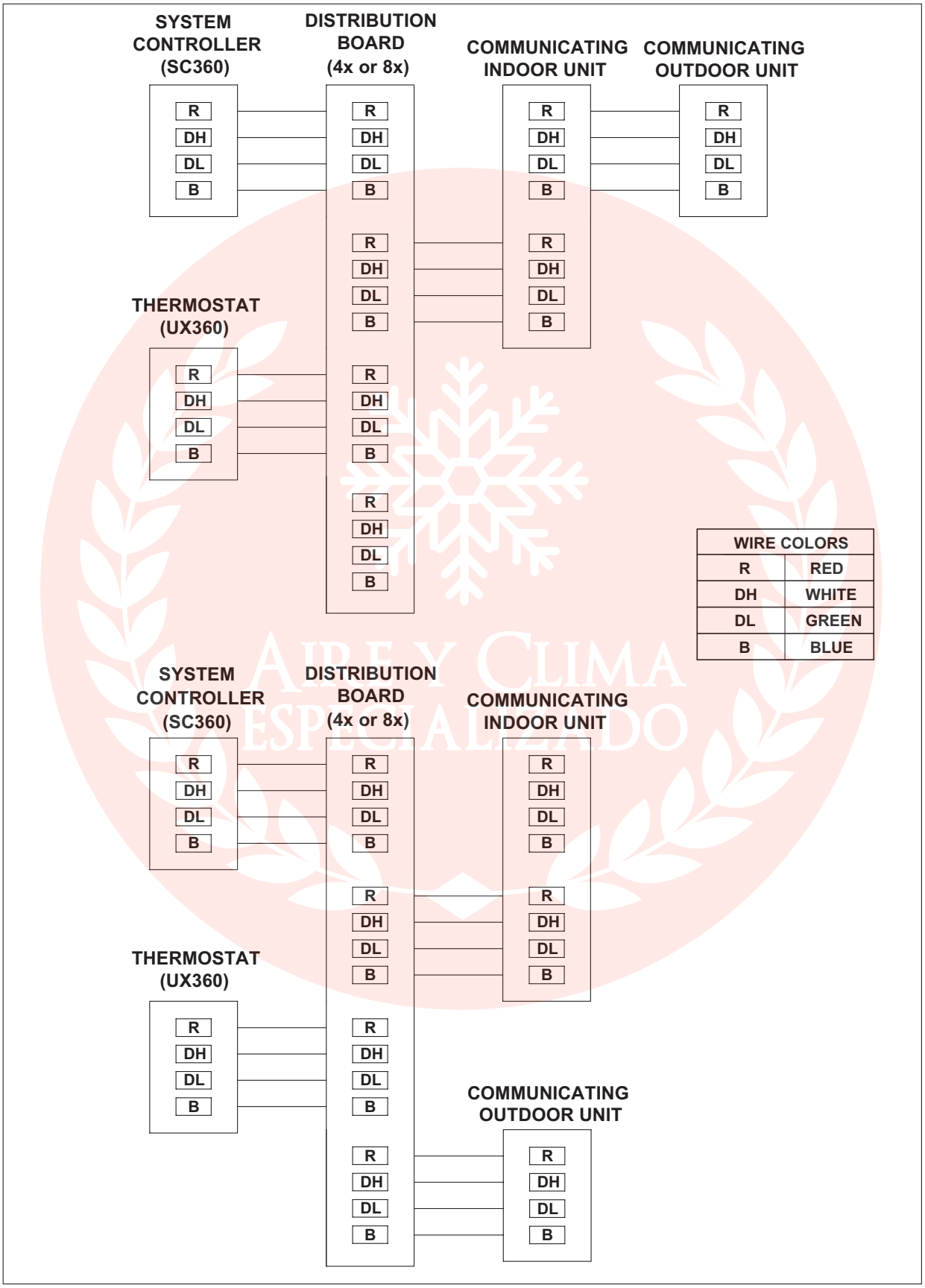

AIRE Y CLIMA ESPECIALIZADO

7. CAN Low Voltage Troubleshooting

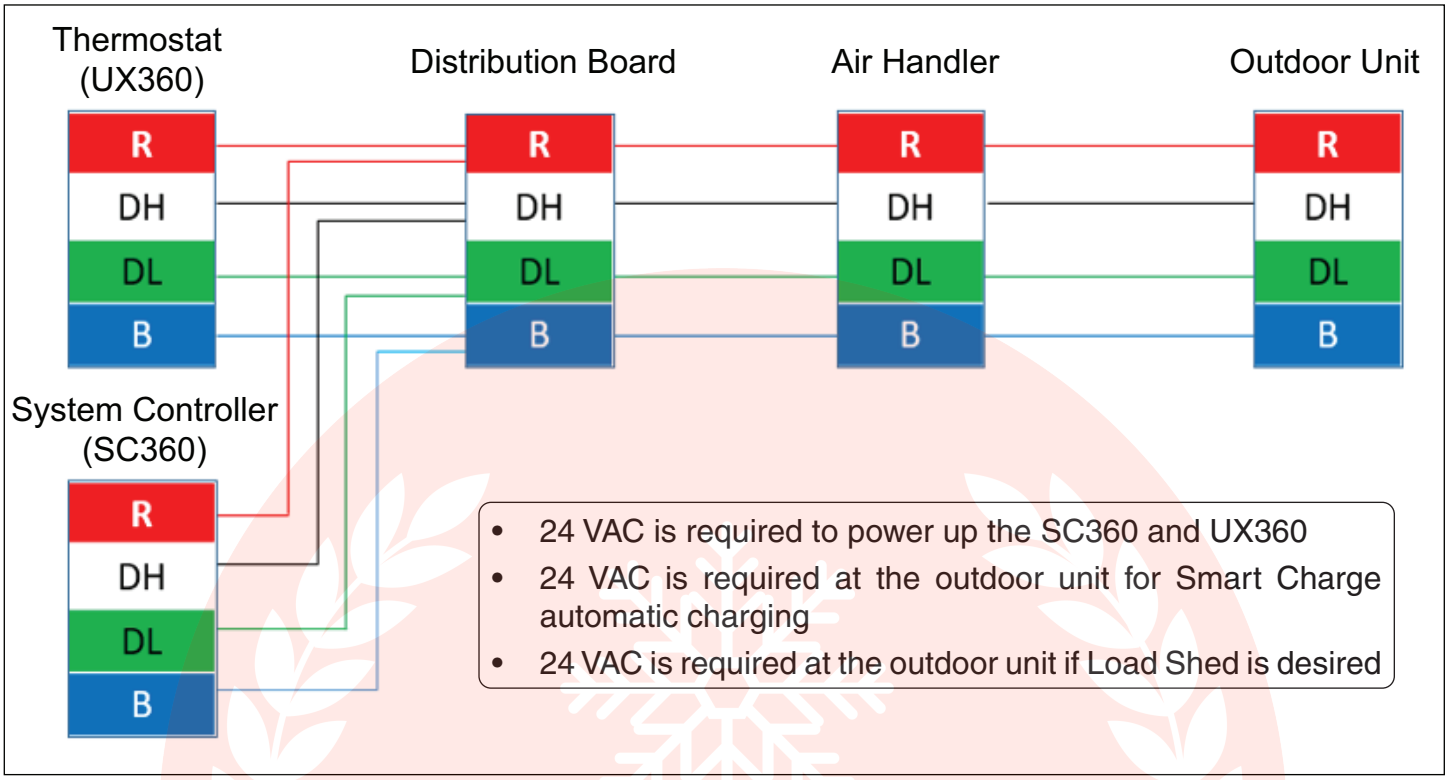

TROUBLESHOOTING STEPS	DESCRIPTION
Bus Idle	
Expected Measurement	2 - 4 VDC between DH and GND 2 - 4 VDC between DL and GND
	Voltage measured from DH to DL will vary depending on bus traffic
Resistance Between DH and DL[1]	
Appropriate range can vary depending on the communicating equipment installed on the system	
Expected Measurement	60 +/- 10 ohms can be expected when the SC360, communicating indoor unit and communicating variable speed outdoor unit are installed.
	90 +/- 10 ohms can be expected with no communicating outdoor unit installed
Lower than appropriate range	Possible short on the bus between DH and DL
Higher than appropriate range	Possible open circuit on the bus
Resistance Between DH and GND[2]	
Expected Measurement	1 Mohms or greater

[1] All power to the system must be turned OFF.
[2] Device must be powered OFF and disconnected from the CAN bus.

8. Button/LED Functions

ACTION	RESULT	LED INDICATIONS
Press & hold the button until you see the LED flash twice (hold at least 6 seconds)	Enables SoftAP Mode	Fast Flashing: SoftAP mode enabled Medium Flashing 10 Seconds then OFF: SoftAP connection succeeded On Solid 10 seconds then OFF: Error
Power Up Sequence	When the SC360 is connected to the Sub-base, the SC360 initiates a 70-90 second power up sequence.	On Solid ~ 6 seconds OFF ~ 4-5 seconds Slow Flashing: ~60 seconds OFF -> LED remains OFF continuously once power up sequence has completed

AIRE Y CLIMA
ESPECIALIZADO

9. Offline Over The Air Upgrades

There may be situations during a repair or otherwise where one or more pieces of the Link system are not on the same software version, or the system does not have access to the internet and an upgrade is needed. In these situations, technicians with Diagnostics Mobile Application access can download a system update to their mobile, then transfer that update to the SC360 System Controller. The mobile-to-controller transfer is available because the system controller can provide a WiFi hotspot to which the Diagnostics Mobile App can connect. The app connects to the hotspot, the system update is transferred to the controller, and the controller can begin updating all the Link components.

NOTE: The WiFi hotspot described here (SoftAP) is only supported here for transferring the system update from a mobile app to the SC360.

Step1: Open Diagnostics App, select **Support and Feedback**.

Step 2: Select **Firmware Update**.

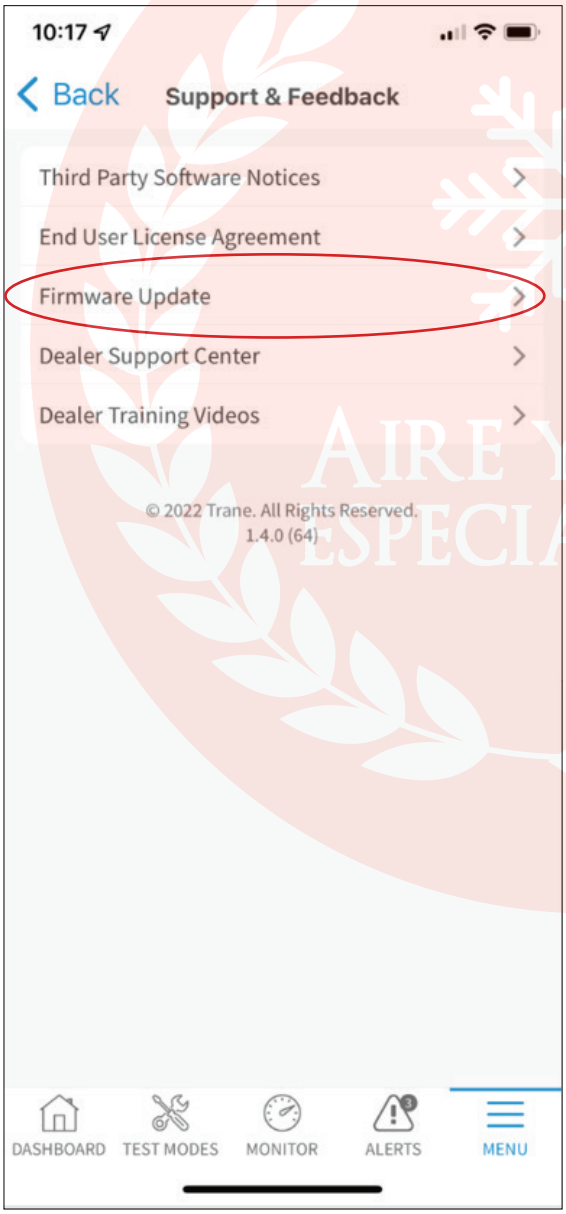

Step 3: Press **Firmware Download** and follow the onscreen prompts to download the latest system update to your device.

NOTE: Once the latest software has been downloaded to a mobile device, it can be pushed to systems multiple times. There is no need to re-download the file for every system that needs an update.

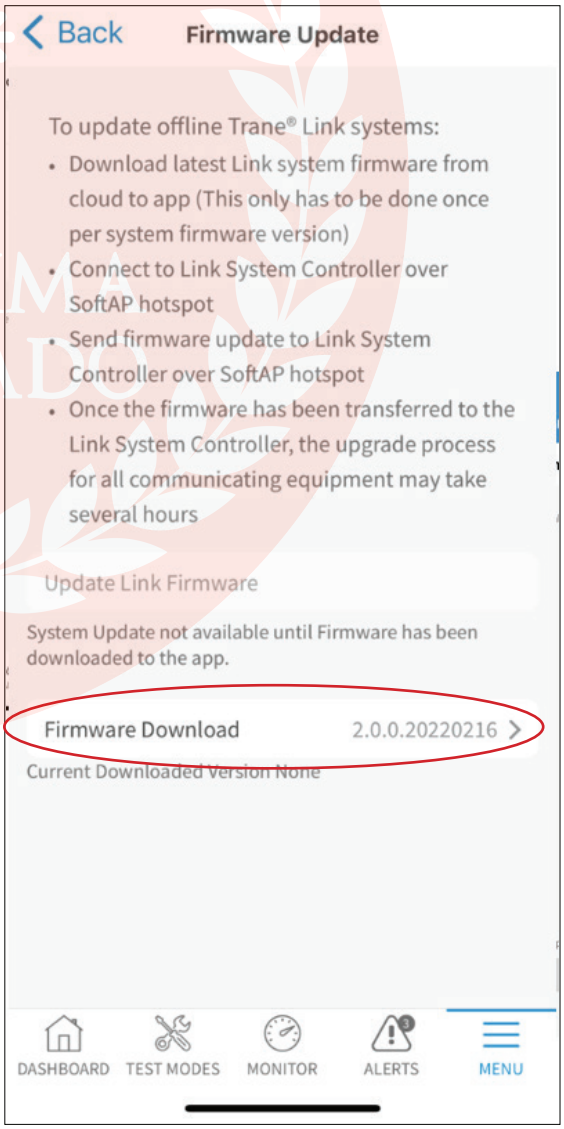

AIRE Y CLIMA ESPECIALIZADO

Step 4: Once software is downloaded to your device, you can now push that update to the Link system.

NOTE: You will need the Mac ID and password that is found on the back of the System Controller or on the front of this install guide.

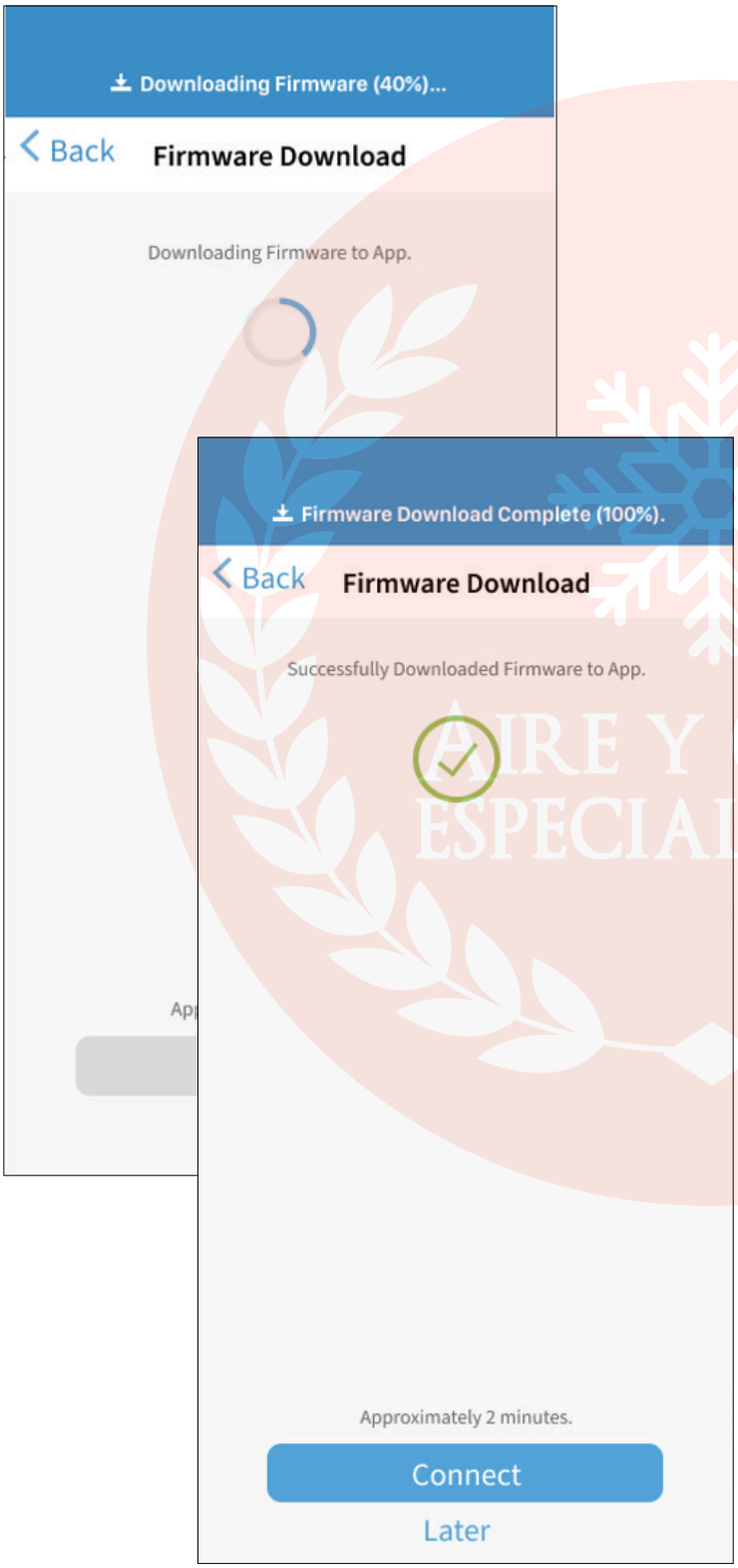

Step 5: Press and hold the button on the right-hand side of the System Controller for at least 6 seconds.

Step 6: At this point, switch to your mobile device's WiFi settings.

Step 7: Connect to hotspot name hvac_XXXXXX (the X's here refers to the last 6 characters of the MAC ID of the system available in that spot).

Step 8: Select hotspot and enter password from System Controller label.

NOTE: The password is case sensitive and is NOT the same as the MAC ID.

Step 9: Once your device is connected to the controller's hotspot, please return to the Diagnostics App and find the screen shown below and follow onscreen prompts.

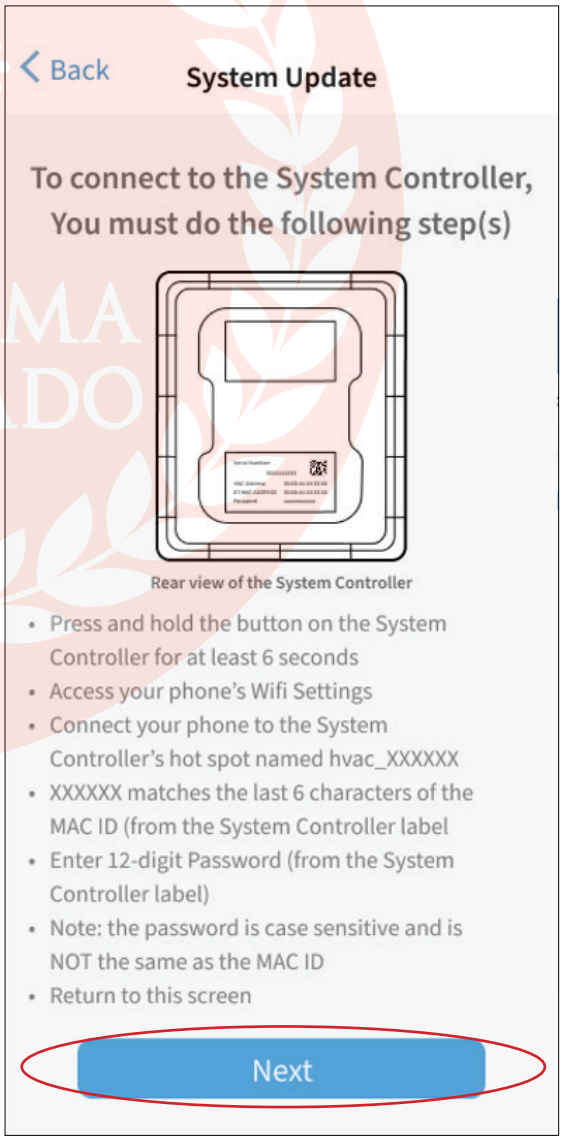

AIRE Y CLIMA ESPECIALIZADO

Step 10: Push update to system and wait for verification that the download was successful. Once complete, the technician's job is done.

NOTE: This system update will take several hours to complete once the System Controller has it.

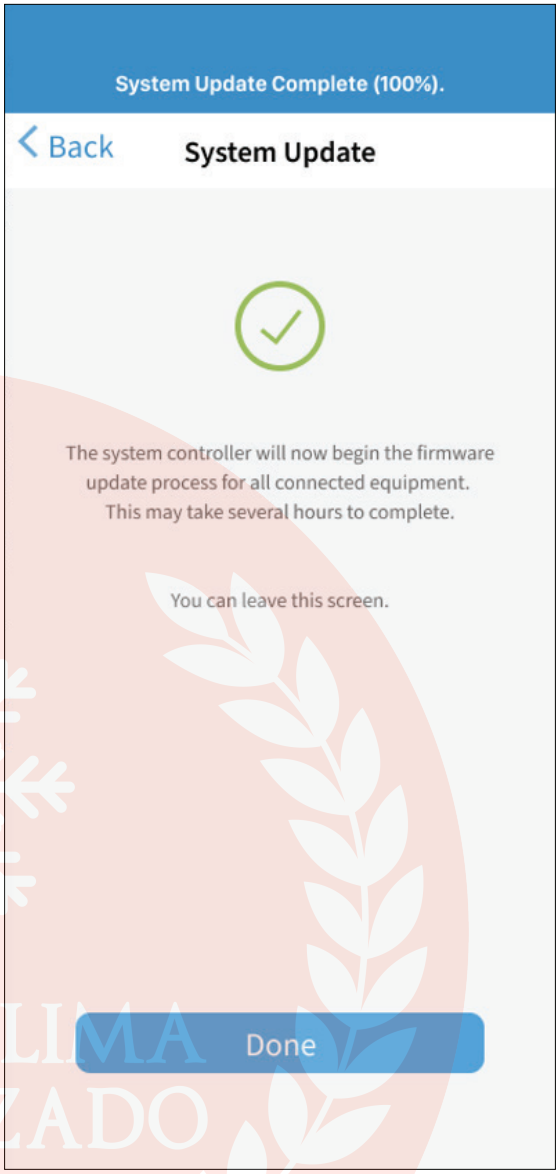

AIRE Y CLIMA ESPECIALIZADO

10. SC360 Notices

TSYS2C60A2VVU

FCC Notice

Contains Transmitter Module FCC ID: MCQ-CCIMX6UL

Contains Transmitter Module FCC ID: XVR-TZM5304-U

This device complies with part 15 of the FCC Rules. Operation is subject to the following two conditions: (1) This device may not cause harmful interference, and (2) this device must accept any interference received, including interference that may cause undesired operation. The antenna(s) used for this transmitter must be installed to provide a separation distance of at least 20 cm from all persons and must not be collocated or operating in conjunction with any other antenna or transmitter.

This equipment has been tested and found to comply with the limits for Class B Digital Device, pursuant to Part 15 of the FCC Rules. These limits are designed to provide reasonable protection against harmful interference in a residential installation. This equipment generates and can radiate radio frequency energy and, if not installed and used in accordance with the instructions, may cause harmful interference to radio communications. However, there is no guarantee that interference will not occur in a particular installation. If this equipment does cause harmful interference to radio or television reception, which can be determined by turning the equipment off and on, the user is encouraged to try to correct the interference by one or more of the following measures.

- *Reorient or relocate the receiving antenna*
- *Increase the separation between the equipment and receiver*
- *Connect the equipment into an outlet on a circuit different from that to which the receiver is connected*
- *Consult the dealer or an experienced radio/TV technician for help*

Any changes or modifications not expressly approved by the party responsible for compliance could void the user's authority to operate the equipment.

IC Notice

Contains Transmitter Module IC ID: 1846A-CCIMX6UL

Contains Transmitter Module IC ID: 6178D-TZM5304U

This device complies with Industry Canada license-exempt RSS standard(s). Operation is subject to the following two conditions: (1) this device may not cause interference, and (2) this device must accept any interference, including interference that may cause undesired operation of the device.

Le present appareil est conforme aux CNR d'Industrie Canada applicables aux appareils radio exempts de license. L'exploitation est autorisée aux deux conditions suivantes: (1) l'appareil de doit pas produire de brouillage, et (2) l'utilisateur de l'appareil doit accepter tout brouillage radioélectrique subi, même si le brouillage est susceptible d'en compromettre le fonctionnement.

AIRE Y CLIMA
ESPECIALIZADO

AIRE Y CLIMA
ESPECIALIZADO

About Trane and American Standard Heating and Air Conditioning
Trane and American Standard create comfortable, energy efficient indoor environments for residential applications. For more information, please visit www.trane.com or www.americanstandardair.com

---

The manufacturer has a policy of continuous data improvement and it reserves the right to change design and specifications without notice. We are committed to using environmentally conscious print practices.

Representative-only illustrations included in this document.

18-HD95D1-1E-EN 20 Aug 2024
Supersedes 18-HD95D1-1D-EN (August 2024)

6200 Troup Highway
Tyler, TX 75707
© 2024