Installation, Operation, and Maintenance

Split System Air Conditioners Odyssey™ with Symbio™ Controls

Air Handler — 5 to 25 Tons

Model (60 Hz)	**Model (50 Hz)**
TWE0604*A/B	TWE0514DA
TWE0724*B	TWE0724DB
TWE0904*A/B	TWE0764DA/B
TWE1204*A/B	TWE1014DA/B
TWE1504*B	TWE1264DB
TWE1804*B	TWE1564DB
TWE2404*B	TWE2014DB
TWE3004*B	TWE2514DB

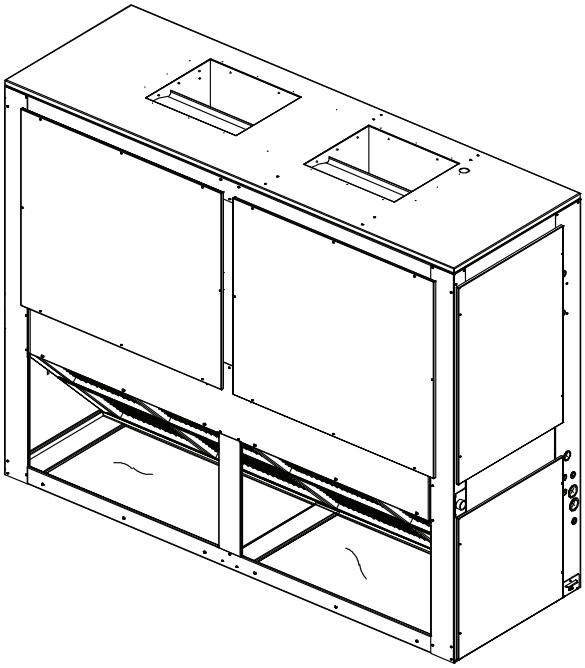

⚠ SAFETY WARNING

Only qualified personnel should install and service the equipment. The installation, starting up, and servicing of heating, ventilating, and air-conditioning equipment can be hazardous and requires specific knowledge and training. Improperly installed, adjusted or altered equipment by an unqualified person could result in death or serious injury. When working on the equipment, observe all precautions in the literature and on the tags, stickers, and labels that are attached to the equipment.

March 2022 **SSA-SVX06M-EN**

Introduction

Read this manual thoroughly before operating or servicing this unit.

Warnings, Cautions, and Notices

Safety advisories appear throughout this manual as required. Your personal safety and the proper operation of this machine depend upon the strict observance of these precautions.

The three types of advisories are defined as follows:

⚠WARNING	Indicates a potentially hazardous situation which, if not avoided, could result in death or serious injury.
⚠CAUTION	Indicates a potentially hazardous situation which, if not avoided, could result in minor or moderate injury. It could also be used to alert against unsafe practices.
NOTICE	Indicates a situation that could result in equipment or property-damage only accidents.

Important Environmental Concerns

Scientific research has shown that certain man-made chemicals can affect the earth's naturally occurring stratospheric ozone layer when released to the atmosphere. In particular, several of the identified chemicals that may affect the ozone layer are refrigerants that contain Chlorine, Fluorine and Carbon (CFCs) and those containing Hydrogen, Chlorine, Fluorine and Carbon (HCFCs). Not all refrigerants containing these compounds have the same potential impact to the environment. Trane advocates the responsible handling of all refrigerants-including industry replacements for CFCs and HCFCs such as saturated or unsaturated HFCs and HCFCs.

Important Responsible Refrigerant Practices

Trane believes that responsible refrigerant practices are important to the environment, our customers, and the air conditioning industry. All technicians who handle refrigerants must be certified according to local rules. For the USA, the Federal Clean Air Act (Section 608) sets forth the requirements for handling, reclaiming, recovering and recycling of certain refrigerants and the equipment that is used in these service procedures. In addition, some states or municipalities may have additional requirements that must also be adhered to for responsible management of refrigerants. Know the applicable laws and follow them.

⚠ WARNING

Proper Field Wiring and Grounding Required!

Failure to follow code could result in death or serious injury.
All field wiring MUST be performed by qualified personnel. Improperly installed and grounded field wiring poses FIRE and ELECTROCUTION hazards. To avoid these hazards, you MUST follow requirements for field wiring installation and grounding as described in NEC and your local/state/national electrical codes.

⚠ WARNING

Personal Protective Equipment (PPE) Required!

Failure to wear proper PPE for the job being undertaken could result in death or serious injury. Technicians, in order to protect themselves from potential electrical, mechanical, and chemical hazards, MUST follow precautions in this manual and on the tags, stickers, and labels, as well as the instructions below:

- **Before installing/servicing this unit, technicians MUST put on all PPE required for the work being undertaken (Examples; cut resistant gloves/sleeves, butyl gloves, safety glasses, hard hat/bump cap, fall protection, electrical PPE and arc flash clothing). ALWAYS refer to appropriate Safety Data Sheets (SDS) and OSHA guidelines for proper PPE.**
- **When working with or around hazardous chemicals, ALWAYS refer to the appropriate SDS and OSHA/GHS (Global Harmonized System of Classification and Labelling of Chemicals) guidelines for information on allowable personal exposure levels, proper respiratory protection and handling instructions.**
- **If there is a risk of energized electrical contact, arc, or flash, technicians MUST put on all PPE in accordance with OSHA, NFPA 70E, or other country-specific requirements for arc flash protection, PRIOR to servicing the unit. NEVER PERFORM ANY SWITCHING, DISCONNECTING, OR VOLTAGE TESTING WITHOUT PROPER ELECTRICAL PPE AND ARC FLASH CLOTHING. ENSURE ELECTRICAL METERS AND EQUIPMENT ARE PROPERLY RATED FOR INTENDED VOLTAGE.**

⚠ WARNING

Follow EHS Policies!

Failure to follow instructions below could result in death or serious injury.

- **All Trane personnel must follow the company's Environmental, Health and Safety (EHS) policies when performing work such as hot work, electrical, fall protection, lockout/tagout, refrigerant handling, etc. Where local regulations are more stringent than these policies, those regulations supersede these policies.**
- **Non-Trane personnel should always follow local regulations.**

⚠ WARNING

Refrigerant under High Pressure!

Failure to follow instructions below could result in an explosion which could result in death or serious injury or equipment damage.
System contains refrigerant under high pressure. Recover refrigerant to relieve pressure before opening the system. See unit nameplate for refrigerant type. Do not use non-approved refrigerants, refrigerant substitutes, or refrigerant additives.

⚠ WARNING

Explosion Hazard!

Failure to follow instructions below could result in an explosion which could result in death or serious injury, and equipment damage.
NEVER bypass system safeties in order to pump down the unit component's refrigerant into the microchannel heat exchanger (MCHE) coil. Do NOT depress the compressor contactor since it effectively bypasses the high-pressure control.

Copyright

This document and the information in it are the property of Trane, and may not be used or reproduced in whole or in part without written permission. Trane reserves the right to revise this publication at any time, and to make changes to its content without obligation to notify any person of such revision or change.

Trademarks

All trademarks referenced in this document are the trademarks of their respective owners.

Revision History

- Updated Model Number Description chapter.
- Updated Pre-Installation chapter.
- Updated Weights chapter.
- Updated Field Wiring section in Installation chapter.
- Updated Symbio Controls section in Installation chapter.
- Updated Low Voltage Wiring section in Installation chapter.
- Updated Wiring Diagram Matrix and Device Location chapter.

AIRE Y CLIMA ESPECIALIZADO

Table of Contents

Model Number Description 5
- Air Handler 5

General Information 6
- Unit Description 6

Pre-Installation 7
- Unit Inspection 7
  - Inspection Checklist 7
- Testing for Leaks 7
- Lifting Recommendations 7
- Repositioning Drain Pan 7
- Refrigerant Piping 8
  - Reorienting Evaporator Coil (TWE126/150 and 156/180) 8
  - Preparation for Refrigerant Piping 9
- Installations, Limitations and Recommendations 9
  - Clearances 10

Dimensional Data 11
- Air Handler 11

Weights 20
- Air Handler 20
  - Accessories 22

Installation 23
- Horizontal Suspension 23
  - Leveling 23
  - Auxiliary Drain Pan 23
- Refrigerant Piping 23
- Condensate Piping 24
- Filter Replacement 25
- Duct Connections 25
- Air Flow Settings 25
- Electrical Wiring 26
- Unit Power Supply 26
- Symbio™ Controls 27
- Installation Checklist 28
- Low Voltage Wiring 28
- Field Wiring 29
- EDC Switch Wiring 29
- Checkout Procedure 29

Startup 30
- Heating and Cooling Setpoint Arbitration 30
- Constant Volume Units 30
- SZVAV and Two Speed Air-Handling Units with Symbio™ Condenser Units 30
- Symbio™ Condenser Configuration Management 32
  - Two-Speed Air Handler Systems 32
  - SZVAV Air Handler Systems 35
  - Field Installed Electric Heat Kits 37
  - Electric Heat as Secondary Heat (Heat Pump Systems) 40

Maintenance 43
- Fan Belt Adjustment 43
- Monthly 44
- Annually (Cooling Season) 45
- Coil Cleaning 45
- Maintenance Log 46

Wiring Diagram Matrix and Device Location 47

Warranty 48
- Central Air Conditioner 48

AIREY CLIMA ESPECIALIZADO

Model Number Description

Air Handler

Digit 1, 2, 3 — Unit Function

TWE = Air Handler

Digit 4, 5, 6— Tonnage

051 = 4.6 Tons (50Hz)
060 = 5 Tons (60 Hz)
072 = 6 Tons (60Hz)(50Hz)
076 = 6.25 Tons (50Hz)
090 = 7.5 Tons (60 Hz)
101 = 8.33 Tons (50Hz)
120 = 10 Tons (60 Hz)
126 = 10.4 Tons (50Hz)
150 = 12.5 Tons (60 Hz)
156 = 13.0 Tons (50Hz)
180 = 15 Tons (60 Hz)
201 = 16.7 Tons (50Hz)
240 = 20 Tons (60 Hz)
251 = 20.9 Tons (50Hz)
300 = 25 Tons (60 Hz)

Digit 7 — Refrigerant

4 = R-410A

Digit 8 — Voltage

1 = 208-230 Vac - 1 PH (60 Hz)
3 = 208-230 Vac - 3 PH (60 Hz)
4 = 460 Vac - 3 PH (60 Hz)
W = 575 Vac - 3 PH (60 Hz)
D = 380–415 Vac - 3 PH (50 Hz)
K = 380 Vac - 3 PH (60Hz)

Digit 9 — Refrigeration Circuit/Stage

A = Single Circuit
B = Dual Circuit

Digit 10 — Major Design Sequence

A = Rev A
B = Rev B

Digit 11 — Minor Design Sequence

A = Rev A
B = Rev B

Digit 12, 13 — Service Digits

**

Digit 14 — Efficiency Generation

A = Generation A (2018 DOE)
B = Generation B

Digit 15 — Controls

1 = Constant Volume
C = 2 Stage Airflow (Electromechanical Cond Only)
D = 2 Stage Airflow/Single Zone VAV (Symbio Cond Only)

Digit 16 — Indoor Fan Sizes

0 = Standard Motor
4 = High Static – (Oversized Motor for VFD Units)

Digit 17 to 40 — None

0 = None

AIRE Y CLIMA
ESPECIALIZADO

General Information

This manual describes proper installation, operation, and maintenance procedures for air cooled systems. By carefully reviewing the information within this manual and following the instructions, the risk of improper operation and/or component damage will be minimized. It is important that periodic maintenance be performed to help assure trouble free operation. Should equipment failure occur, contact a qualified service organization with qualified, experienced HVAC technicians to properly diagnose and repair this equipment.

Important: *All phases of this installation must comply with the NATIONAL, STATE & LOCAL CODES. In addition to local codes, the installation must conform with National Electric Code -ANSI/NFPA NO. 70 LATEST REVISION.*

Any individual installing, maintaining, or servicing this equipment must be properly trained, licensed and qualified.

Important: *Do not remove the VFD without first contacting technical support! For performance-related questions and diagnostic VFD support in North America call 1-877-872-6363. Any return requires a claim number FIRST. Removal of the VFD prior to this step will void the unit's warranties.*

Installation procedures should be performed in the sequence that they appear in this manual. Do not destroy or remove the manual from the unit. The manual should remain weather-protected with the unit until all installation procedures are complete.

Note: *It is not the intention of this manual to cover all possible variations in systems that may occur or to provide comprehensive information concerning every possible contingency that may be encountered during an installation. If additional information is required or if specific problems arise that are not fully discussed in this manual, contact your local sales office.*

Use the installation checklist provided In this manual to verify that all necessary installation procedures have been completed. Do not use the checklist as a substitute for reading the information contained in the manual. Read the entire manual before beginning installation procedures.

Unit Description

These air handler models incorporate a single slab coil assembly, improved application flexibility, servicing, maintenance accessibility and an improved accessory line. They are fully convertible, (vertical to horizontal discharge) without field removal of the coil assembly. They are shipped ready for horizontal installation.

All units have one drain pan that can be installed in any one of four positions. This allows for vertical or horizontal applications and right or left exit.

Important: *All dual circuit (digit 9 = B) have an intertwined coil, except for the 25 ton, TWE251 and TWE300 units.*

AIRE Y CLIMA
ESPECIALIZADO

Pre-Installation

The final position for the air handler must be dictated by required service access to it, weight distribution over structural supports, and by the locations of electrical, refrigerant and condensate drainage connections. After this is determined, the following preparations should be made.

Unit Inspection

Inspect material carefully for any shipping damage. If damaged, it must be reported to, and claims made against the transportation company. Compare the information that appears on the unit nameplate with ordering and submittal data to ensure the proper unit was shipped. Available power supply must be compatible with electrical characteristics specified on component nameplates. Replace damaged parts with authorized parts only.

Important: *Units ordered with a VFD cannot be field converted to 460 V from 208-230 or from 208-230 V to 460 V.*

Inspection Checklist

To protect against loss due to damage incurred in transit, complete the following checklist upon receipt of the unit.

- ☐ Inspect individual pieces of the shipment before accepting the unit. Check for obvious damage to the unit or packing material.
- ☐ Inspect the unit for concealed damage before it is stored and as soon as possible after delivery. Concealed damage must be reported within 15 days. If concealed damage is discovered, stop unpacking the shipment. Do not remove damaged material from the receiving location. Take photos of the damage if possible. The owner must provide reasonable evidence that the damage did not occur after delivery.
- ☐ Notify the carrier's terminal of damage immediately by phone and by mail. Request an immediate joint inspection of the damage by the carrier and the consignee.
- ☐ Notify the sales representative and arrange for repair. Do not repair the unit until the damage is inspected by the carrier's representative.

Testing for Leaks

All TWE units are shipped with a holding charge of nitrogen in each circuit and should be leak tested before installation.

1. Remove the access panel.
2. Locate the liquid line or suction line access valve for each circuit.
3. Install gauges to determine if the circuits are still pressurized. If not, the charge has escaped and should be repaired as required to obtain a leak-free circuit.

Lifting Recommendations

⚠ WARNING

Improper Unit Lift!

Failure to properly lift unit in a LEVEL position could result in unit dropping and possibly crushing operator/technician which could result in death or serious injury, and equipment or property-only damage.

Test lift unit approximately 24 inches (61 cm) to verify proper center of gravity lift point. To avoid dropping of unit, reposition lifting point if unit is not level.

NOTICE

Equipment Damage!

Use spreader bars to prevent straps from damaging the unit. Install the bars between lifting straps, both underneath the unit and above the unit to prevent the straps from crushing the unit cabinet or damaging the finish.

Before preparing the unit for lifting, estimate the approximate center of gravity for lifting safety. Because of placement of internal components, the unit weight may be unevenly distributed. See "Weights," p. 20 for approximate unit weights.

The crated unit can be moved using a forklift of suitable capacity. For lifting the unit into an elevated mounting position, run lifting straps or slings under the unit and attach securely to the lifting device.

Repositioning Drain Pan

Air handlers come with one drain pan that can be installed in any one of four positions; this allows for vertical or horizontal application and right or left condensate line connection.

Note: *Important! All air handlers are shipped with the drain pan installed in the horizontal position and the connection on the left side (as shown in Figure 1, p. 8. If an alternate position is required, the drain pan should be repositioned before setting the air handler. Ensure there is enough clearance to the sides of the unit for repositioning the drain pan after installation.*

1. Remove the access plate at the opposite end of the drain connection. This plate secures and lifts the back end of the drain pan for sloping. It must be removed before the drain pan can be removed. This

is done as follows:

a. Remove the screw
b. Lift the access plate up
c. Pull the plate out. If the drain pan is to be moved to the vertical position also remove the other two access plates.

2. Remove the screw securing the drain pan.
   a. Lift the pan up
   b. Slide the pan out
3. Install the drain pan into the new position.
   a. Slide the drain pan into the opening
   b. Lift the drain pan up
   c. Push it in all the way
   d. Drop it down over the lip of the opening, secure with screw
4. Install the access plate on the opposite end of the drain pain.
   a. Slide the edge of the access plate under the drain pan
   b. Lift the access plate and drain pan up
   c. Push the access plate in
   d. Drop the access plate down over the lip of the opening, secure with screw

Note: *If the drain pan is being moved to the vertical position, install the other access plates over the horizontal position opening*

Figure 1. Drain pan location

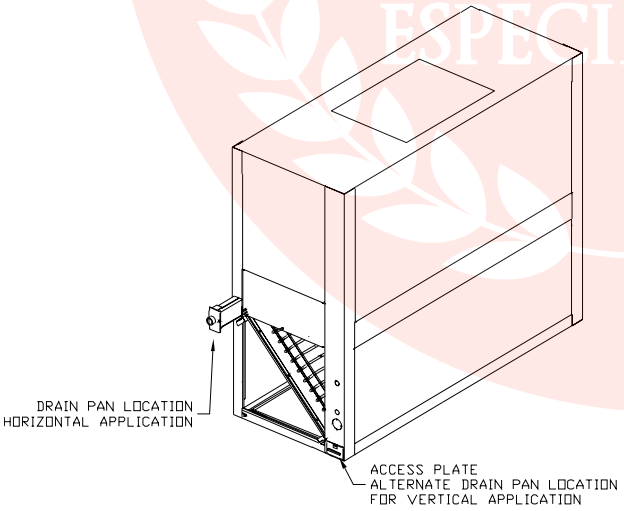

Figure 2. Drain pan relocation

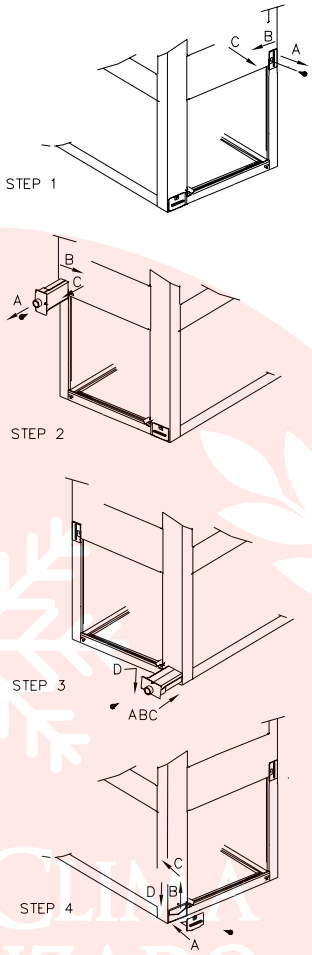

NOTICE

System Component Damage!

These air handlers are shipped with a dry nitrogen holding charge in the coil. Depress or remove the access valve cone to bleed off the nitrogen prior to brazing. Temporarily cap off tubes if the refrigerant line connections are to be made later.

Refrigerant Piping

Reorienting Evaporator Coil (TWE126/150 and 156/180)

Important: *Applies to TWE126/150 and 156/180 when positioned for vertical upflow. Unit is shipped in the horizontal position. If installing in the* ***vertical position****, the coil* ***must be*** *reoriented by rotating the coil 4 degrees (control box side) from the shipped position.*

1. Remove screws from top evaporator coil bracket (bracket that attaches coil to cabinet and runs the length of the unit). See Figure 3, p. 9.

2. Rotate evaporator coil approximately 4 degrees clockwise - looking from the control box end. When the evaporator coil is rotated, the lower set of evaporator coil bracket holes will align with the support bracket (from which it was originally fastened).
3. Reinsert screws in evaporator coil bracket.

Figure 3. Evaporator coil reorientation for TWE126, 150, 156, 180

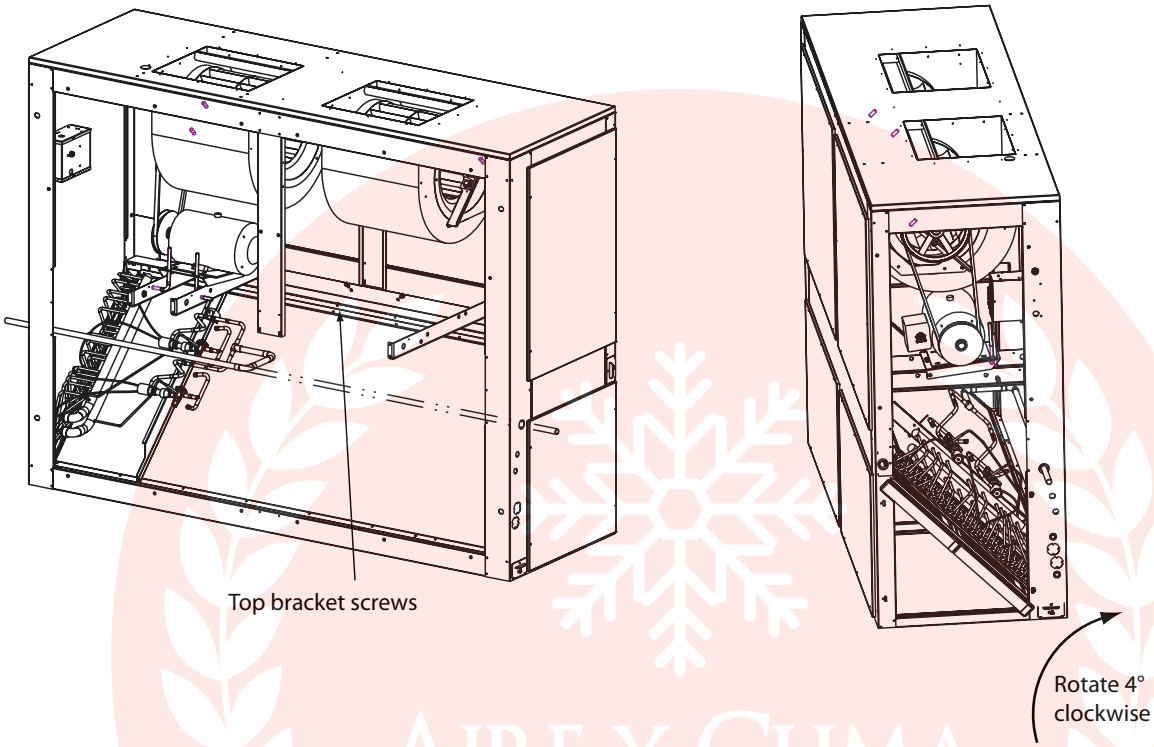

Preparation for Refrigerant Piping

NOTICE

Equipment Damage!

Do not apply heat to remove seal caps until the gauge port cores have been removed. If seal caps are intact, application of heat may generate excessive pressure in the unit and result in damage to the coil or expansion valve.

The air handler is designed so that refrigerant piping can enter from either the right or left hand side. It is shipped with the intent that the refrigerant lines will enter from the left hand side. To convert to right hand entry, unbraze the elbow on the suction line and rotate 180° and rebraze.

Important: *Access to refrigerant lines is limited in all horizontal and some vertical applications. Therefore, refrigerant lines should be stubbed out and temporarily capped prior to setting the air handler. Protect adjacent surfaces from heat damage when brazing in and around the air handler. See* *Figure 4, p. 11*.

Installations, Limitations and Recommendations

NOTICE

System Component Damage!

Properly insulate all refrigerant gas piping to prevent possible water damage due to condensation and to prevent capacity loss and possible compressor damage.

The general location of the air handler is normally selected by the architect, contractor and/or buyer. For proper installation, the following items must be considered:

- Available power supply must agree with electrical data on component nameplate.

  Note: *Unit voltage cannot be changed on units ordered with a VFD.*
- If external accessories are installed on the unit, additional clearances must be provided.
- All duct work should be properly insulated to prevent condensation and heat loss.
- Refrigerant gas piping must be insulated.

It is recommended that the outline drawings in the Dimensional Data section be studied and dimensions properly noted and checked against the selected installation site. By noting in advance which features are to be used, proper clearance allowances can be made for installation and possible future service.

Important: *When installing these units "free standing" with discharge grills and isolators, a top support with isolator should be added to prevent tipping. Support and isolator can be attached to a wall or other appropriate structure.*

If adding external accessories to the unit, additional clearances must be considered for the overall space needed.

For installation of accessories available for this air handler, follow the installation instructions that are shipped with each accessory.

Clearances

Allow the following minimum clearances for serviceability:

- Front and Back – 24 in. (610 mm)
- Sides – 22 in. (559 mm) for 5 - 10 ton units and 32 in. (813 mm) for 12.5 - 25 ton units

Note: *See Dimensional Data for additional reference.*

AIRE Y CLIMA
ESPECIALIZADO

Dimensional Data

Air Handler

Figure 4. Height, width and depth measurements

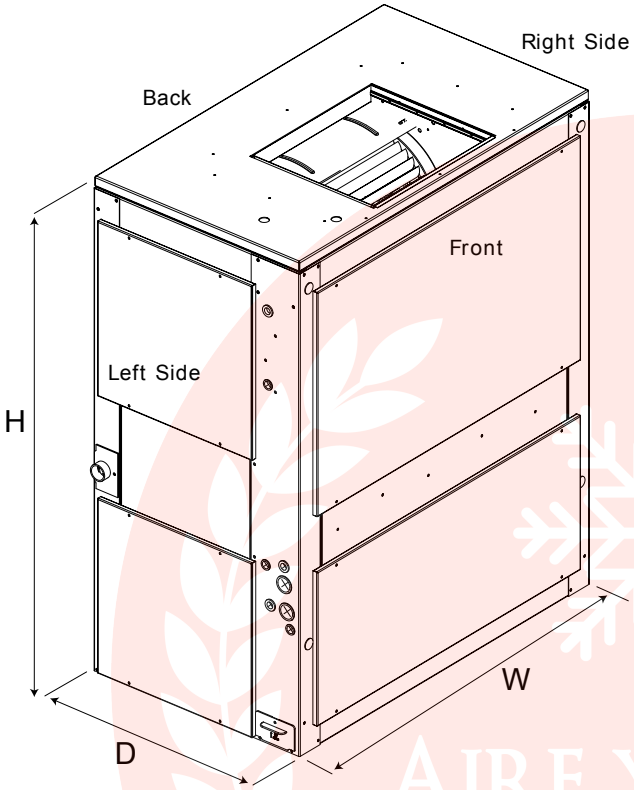

Model Number	H - in. (mm)	W - in. (mm)	D - in. (mm)
TWE051, 060	48-1/8 (1222.4)	39-5/8 (1006.5)	23-5/8 (600.0)
TWE072, 076, 090	54-1/8 (1374.8)	49-1/8 (1247.8)	26-1/2 (673.1)
TWE101, 120	54-1/8 (1374.8)	65-1/8 (1654.2)	26-1/2 (673.1)
TWE126, 150, 156, 180	69-1/8 (1756.0)	81-1/4 (2063.7)	30 (762.0)
TWE201, 240, 251, 300	71-7/8 (1806.6)	94-1/4 (2394.0)	32-1/8 (816.0)

Note: Full dimensional data is available on the following pages.

AIRE Y CLIMA ESPECIALIZADO

Figure 5. 4.6, 5 ton air handler, single circuit – in. (mm)

Note: *Duct flange is a field-installed accessory.*

NOTES:
1. PANEL DEPTH 1/2" (12.7) (TYP. ALL PANELS).
2. REMOVABLE DRAIN PAN AND ATTACHED DRAIN CONNECTION MAY BE INSTALLED ON END OF UNIT IN EITHER THE VERTICAL OR HORIZONTAL CONFIGURATION, PLASTIC DRAIN PAN ACCESS PLATE ON THE END OF UNIT OPPOSITE DRAIN CONNECTION MUST BE REMOVED TO SLIDE DRAIN PAN OUT OF UNIT FOR CLEANING. ACCESS PLATE MUST BE RE-INSTALLED AFTER SLIDING DRAIN PAN BACK INTO UNIT.
3. IF PERIODIC DRAIN PAN CLEANING IS REQUIRED, ALLOW ROOM FOR PARTIAL REMOVAL OF DRAIN PAN CONNECTION AT END OF UNIT.
4. 1" (25.4) FEMALE SCHED. 40 (10.2) PVC PIPE DRAIN CONNECTION VERTICAL CONFIGURATION.
5. 1" (25.4) FEMALE SCHED. 40 (10.2) PVC PIPE DRAIN CONNECTION HORIZONTAL CONFIGURATION.

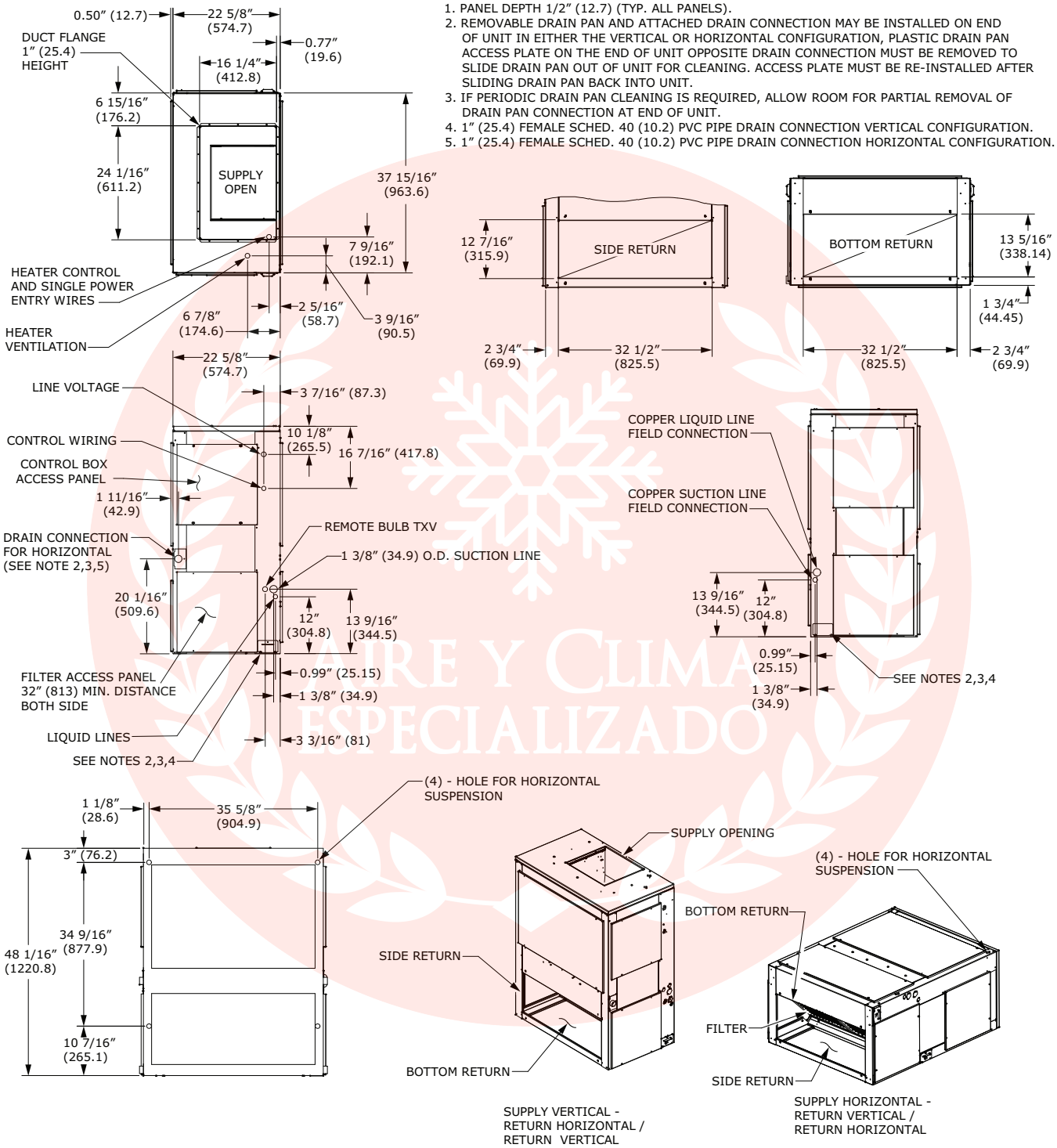

Figure 6. 5 ton air handler, dual circuit – in. (mm)

Note: *Duct flange is a field-installed accessory.*

NOTES:
1. PANEL DEPTH 1/2" (12.7) (TYP. ALL PANELS).
2. REMOVABLE DRAIN PAN AND ATTACHED DRAIN CONNECTION MAY BE INSTALLED ON END OF UNIT IN EITHER THE VERTICAL OR HORIZONTAL CONFIGURATION, PLASTIC DRAIN PAN ACCESS PLATE ON THE END OF UNIT OPPOSITE DRAIN CONNECTION MUST BE REMOVED TO SLIDE DRAIN PAN OUT OF UNIT FOR CLEANING. ACCESS PLATE MUST BE RE-INSTALLED AFTER SLIDING DRAIN PAN BACK INTO UNIT.
3. IF PERIODIC DRAIN PAN CLEANING IS REQUIRED, ALLOW ROOM FOR PARTIAL REMOVAL OF DRAIN CONNECTION AT END OF UNIT.
4. 1" (25.4) FEMALE SCHED. 40 (10.2) PVC PIPE DRAIN CONNECTION VERTICAL CONFIGURATION.
5. 1" (25.4) FEMALE SCHED. 40 (10.2) PVC PIPE DRAIN CONNECTION HORIZONTAL CONFIGURATION.

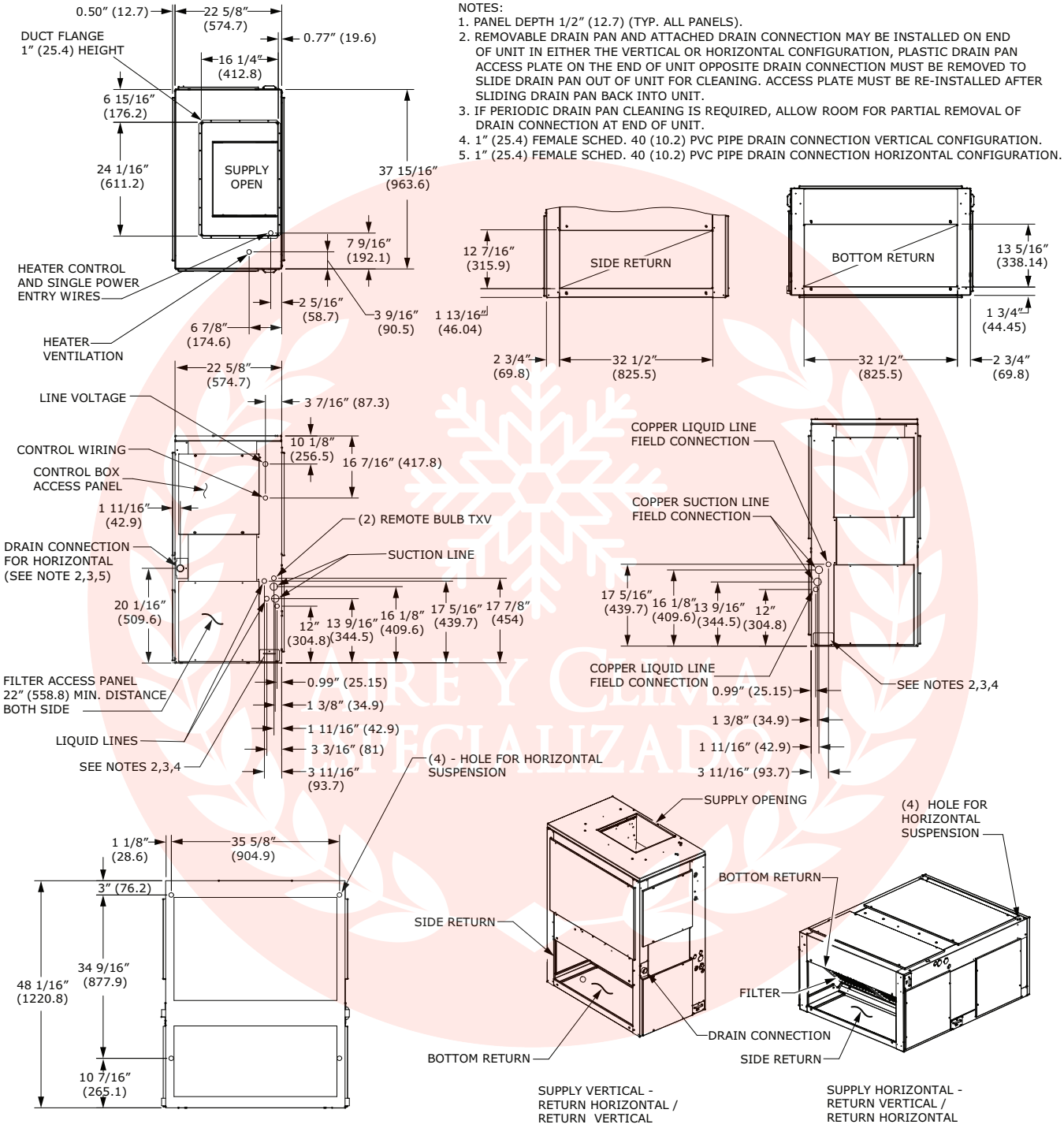

Figure 7. 6.25, 7.5 ton air handler, single circuit – in. (mm)

Note: *Duct flange is a field-installed accessory.*

NOTES:
1. PANEL DEPTH 1/2″ (12.7) (TYP. ALL PANELS).
2. REMOVABLE DRAIN PAN AND ATTACHED DRAIN CONNECTION MAY BE INSTALLED ON END OF UNIT IN EITHER THE VERTICAL OR HORIZONTAL CONFIGURATION, PLASTIC DRAIN PAN ACCESS PLATE ON THE END OF UNIT OPPOSITE DRAIN CONNECTION MUST BE REMOVED TO SLIDE DRAIN PAN OUT OF UNIT FOR CLEANING. ACCESS PLATE MUST BE RE-INSTALLED AFTER SLIDING DRAIN PAN BACK INTO UNIT.
3. IF PERIODIC DRAIN PAN CLEANING IS REQUIRED, ALLOW ROOM FOR PARTIAL REMOVAL OF DRAIN PAN CONNECTION AT END OF UNIT.
4. 1″ (25.4) FEMALE SCHED. 40 (10.2) PVC PIPE DRAIN CONNECTION VERTICAL CONFIGURATION.
5. 1″ (25.4) FEMALE SCHED. 40 (10.2) PVC PIPE DRAIN CONNECTION HORIZONTAL CONFIGURATION.

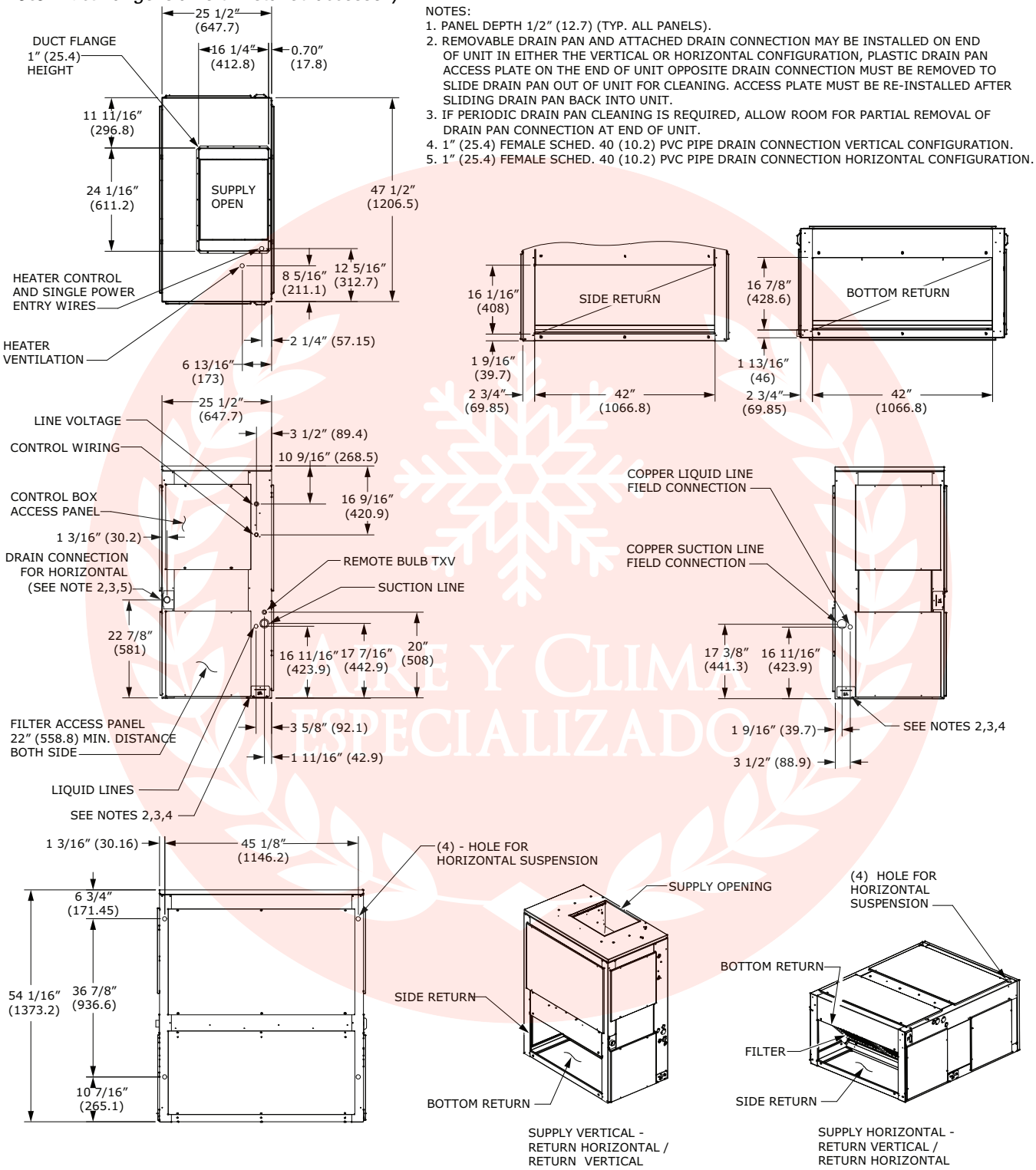

Figure 8. 6, 6.25, 7.5 ton air handler, dual circuit – in. (mm)

Note: *Duct flange is a field-installed accessory.*

NOTES:
1. PANEL DEPTH 1/2" (12.7) (TYP. ALL PANELS).
2. REMOVABLE DRAIN PAN AND ATTACHED DRAIN CONNECTION MAY BE INSTALLED ON END OF UNIT IN EITHER THE VERTICAL OR HORIZONTAL CONFIGURATION, PLASTIC DRAIN PAN ACCESS PLATE ON THE END OF UNIT OPPOSITE DRAIN CONNECTION MUST BE REMOVED TO SLIDE DRAIN PAN OUT OF UNIT FOR CLEANING. ACCESS PLATE MUST BE RE-INSTALLED AFTER SLIDING DRAIN PAN BACK INTO UNIT.
3. IF PERIODIC DRAIN PAN CLEANING IS REQUIRED, ALLOW ROOM FOR PARTIAL REMOVAL OF DRAIN PAN CONNECTION AT END OF UNIT.
4. 1" (25.4) FEMALE SCHED. 40 (10.2) PVC PIPE DRAIN CONNECTION VERTICAL CONFIGURATION.
5. 1" (25.4) FEMALE SCHED. 40 (10.2) PVC PIPE DRAIN CONNECTION HORIZONTAL CONFIGURATION.

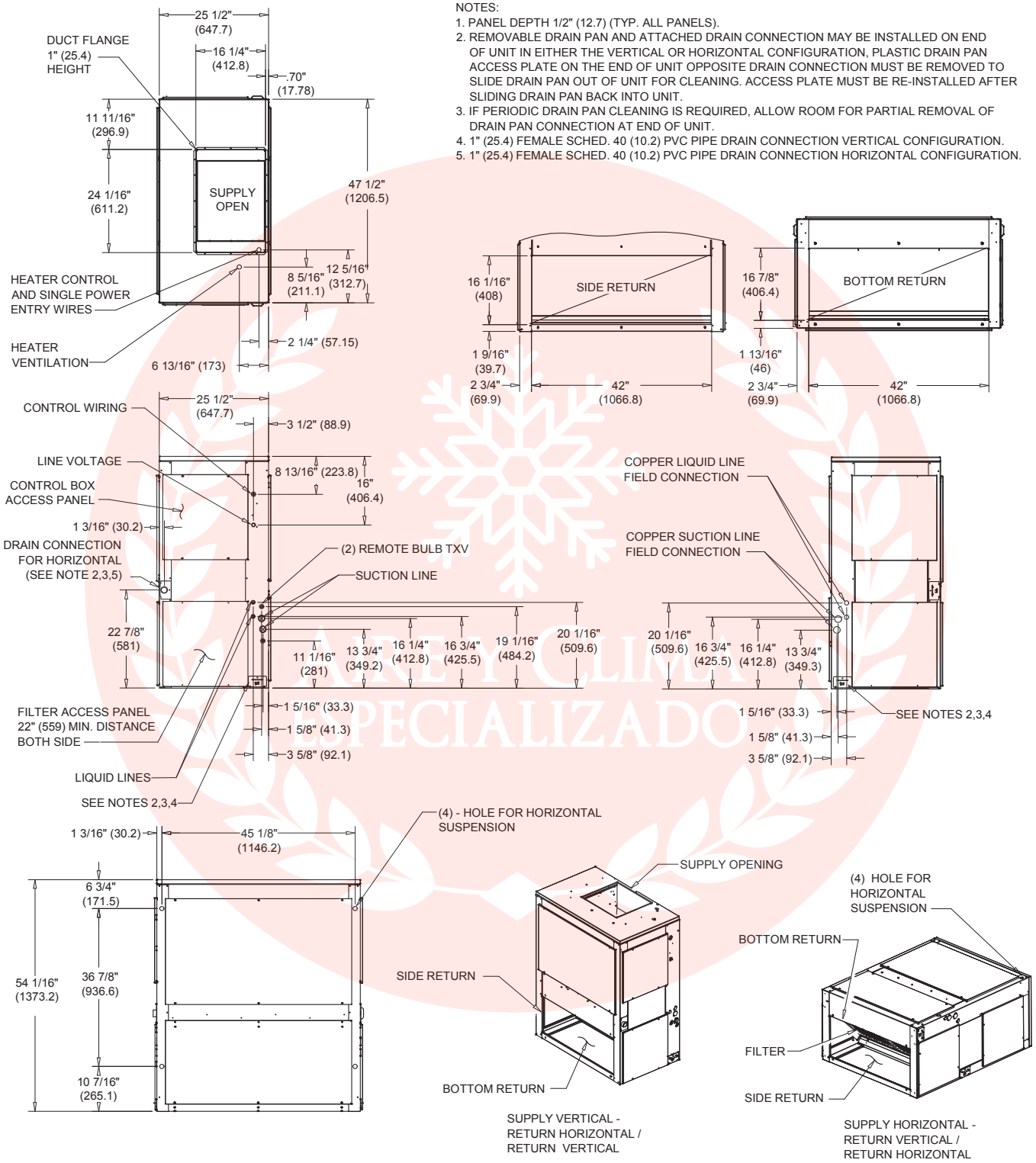

Figure 9. 8.33, 10 ton air handler, single circuit – in. (mm)

Note: *Duct flange is a field-installed accessory.*

NOTES:
1. PANEL DEPTH 1/2″ (12.7) (TYP. ALL PANELS).
2. REMOVABLE DRAIN PAN AND ATTACHED DRAIN CONNECTION MAY BE INSTALLED ON END OF UNIT IN EITHER THE VERTICAL OR HORIZONTAL CONFIGURATION, PLASTIC DRAIN PAN ACCESS PLATE ON THE END OF UNIT OPPOSITE DRAIN CONNECTION MUST BE REMOVED TO SLIDE DRAIN PAN OUT OF UNIT FOR CLEANING. ACCESS PLATE MUST BE RE-INSTALLED AFTER SLIDING DRAIN PAN BACK INTO UNIT.
3. IF PERIODIC DRAIN PAN CLEANING IS REQUIRED, ALLOW ROOM FOR PARTIAL REMOVAL OF DRAIN PAN CONNECTION AT END OF UNIT.
4. 1″ (25.4) FEMALE SCHED. 40 (10.2) PVC PIPE DRAIN CONNECTION VERTICAL CONFIGURATION.
5. 1″ (25.4) FEMALE SCHED. 40 (10.2) PVC PIPE DRAIN CONNECTION HORIZONTAL CONFIGURATION.

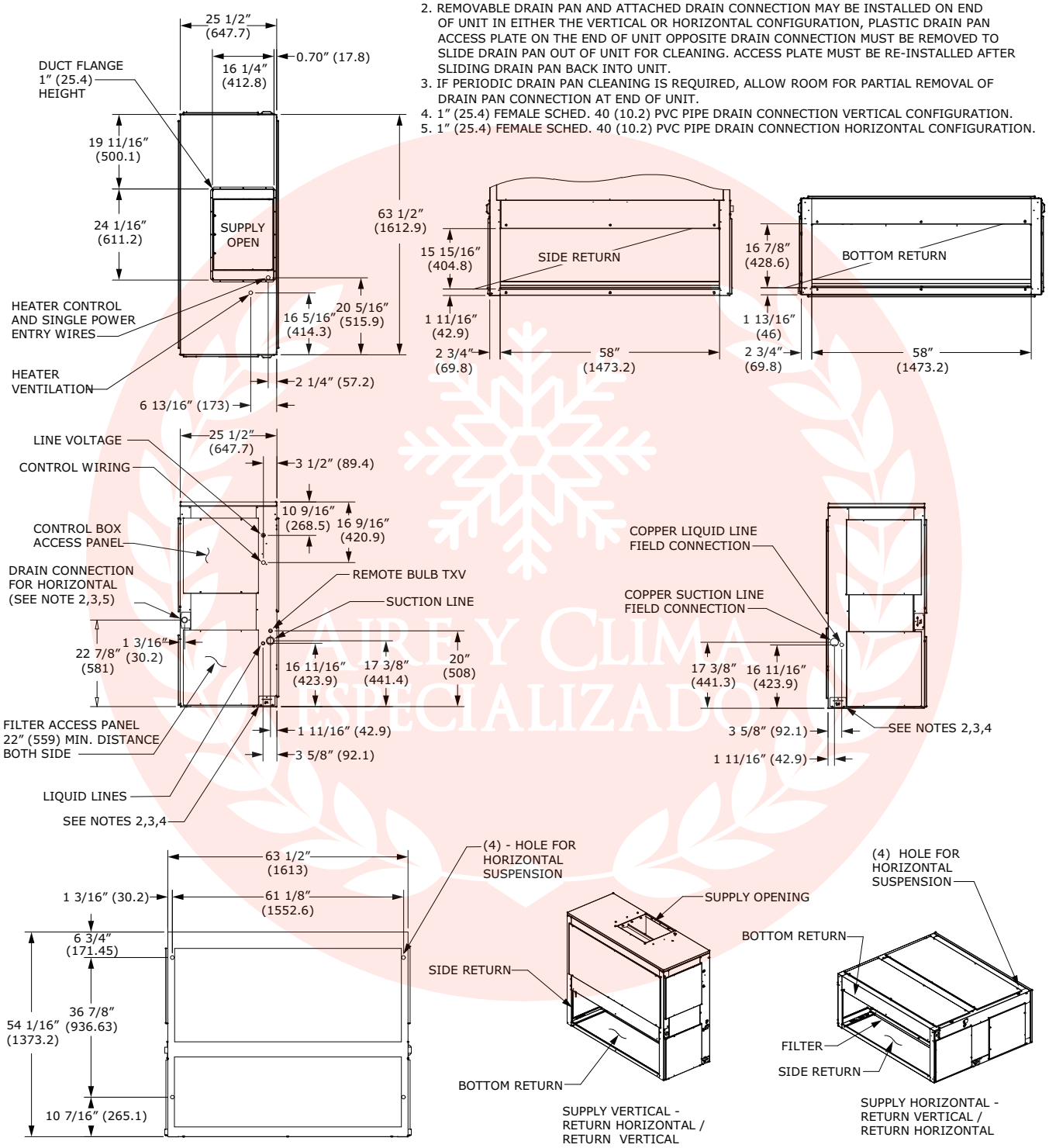

AREY CLIMA ESPECIALIZADO

Figure 10. 8.33, 10 ton air handler, dual circuit – in. (mm)

Note: *Duct flange is a field-installed accessory.*

NOTES:
1. PANEL DEPTH 1/2″ (12.7) (TYP. ALL PANELS).
2. REMOVABLE DRAIN PAN AND ATTACHED DRAIN CONNECTION MAY BE INSTALLED ON END OF UNIT IN EITHER THE VERTICAL OR HORIZONTAL CONFIGURATION, PLASTIC DRAIN PAN ACCESS PLATE ON THE END OF UNIT OPPOSITE DRAIN CONNECTION MUST BE REMOVED TO SLIDE DRAIN PAN OUT OF UNIT FOR CLEANING. ACCESS PLATE MUST BE RE-INSTALLED AFTER SLIDING DRAIN PAN BACK INTO UNIT.
3. IF PERIODIC DRAIN PAN CLEANING IS REQUIRED, ALLOW ROOM FOR PARTIAL REMOVAL OF DRAIN PAN CONNECTION AT END OF UNIT.
4. 1″ (25.4) FEMALE SCHED. 40 (10.2) PVC PIPE DRAIN CONNECTION VERTICAL CONFIGURATION.
5. 1″ (25.4) FEMALE SCHED. 40 (10.2) PVC PIPE DRAIN CONNECTION HORIZONTAL CONFIGURATION.

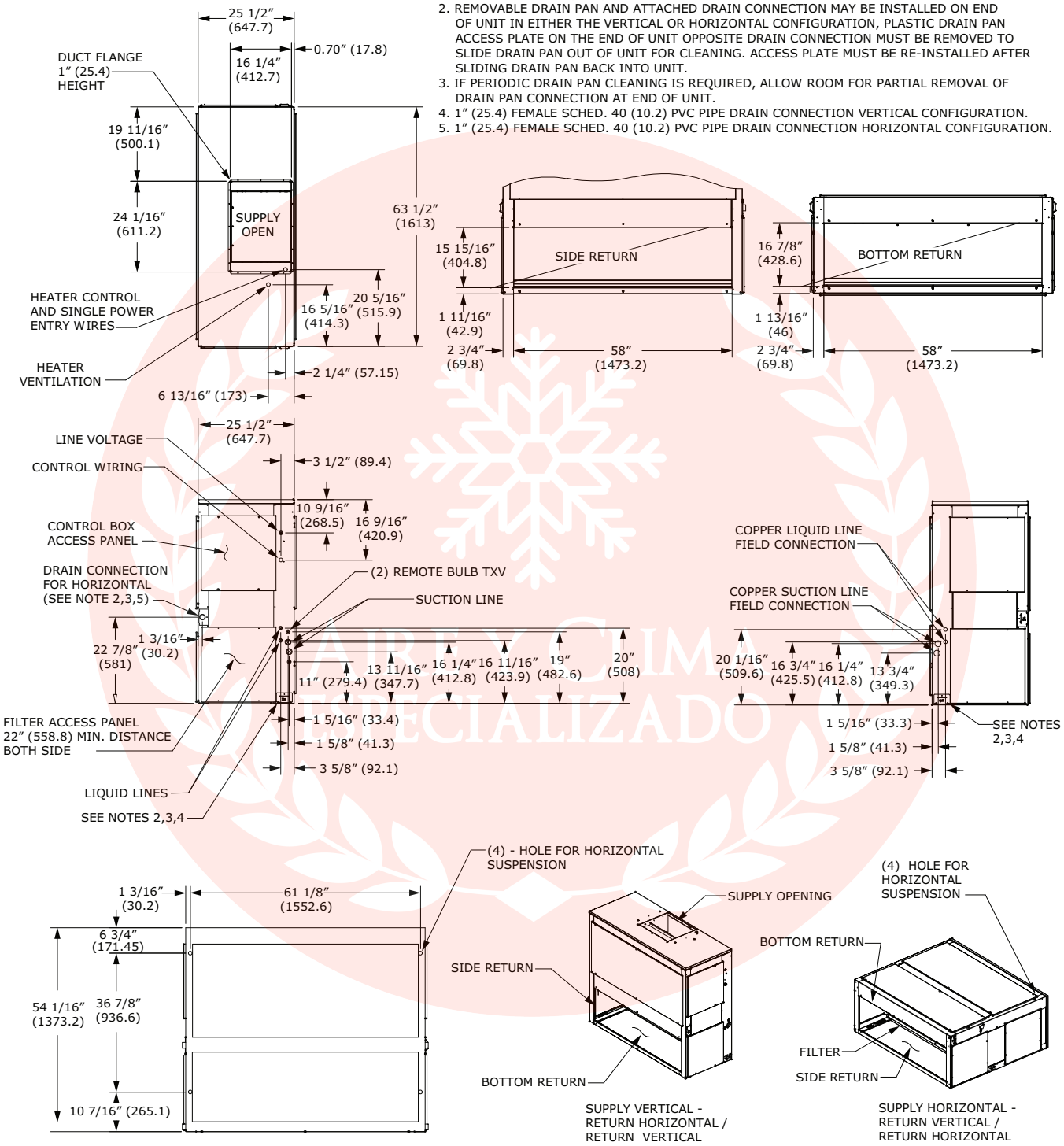

Figure 11. 10.4, 13, 12.5, 15, 15 ton air handler, dual circuit – in. (mm)

Note: *Duct flange is a field-installed accessory.*

NOTES:
1. PANEL DEPTH 1/2" (12.7) (TYP. ALL PANELS).
2. REMOVABLE DRAIN PAN AND ATTACHED DRAIN CONNECTION MAY BE INSTALLED ON END OF UNIT IN EITHER THE VERTICAL OR HORIZONTAL CONFIGURATION, PLASTIC DRAIN PAN ACCESS PLATE ON THE END OF UNIT OPPOSITE DRAIN CONNECTION MUST BE REMOVED TO SLIDE DRAIN PAN OUT OF UNIT FOR CLEANING. ACCESS PLATE MUST BE RE-INSTALLED AFTER SLIDING DRAIN PAN BACK INTO UNIT.
3. IF PERIODIC DRAIN PAN CLEANING IS REQUIRED, ALLOW ROOM FOR PARTIAL REMOVAL OF DRAIN PAN CONNECTION AT END OF UNIT.
4. 1" (25.4) FEMALE SCHED. 40 (10.2) PVC PIPE DRAIN CONNECTION VERTICAL CONFIGURATION.
5. 1" (25.4) FEMALE SCHED. 40 (10.2) PVC PIPE DRAIN CONNECTION HORIZONTAL CONFIGURATION.

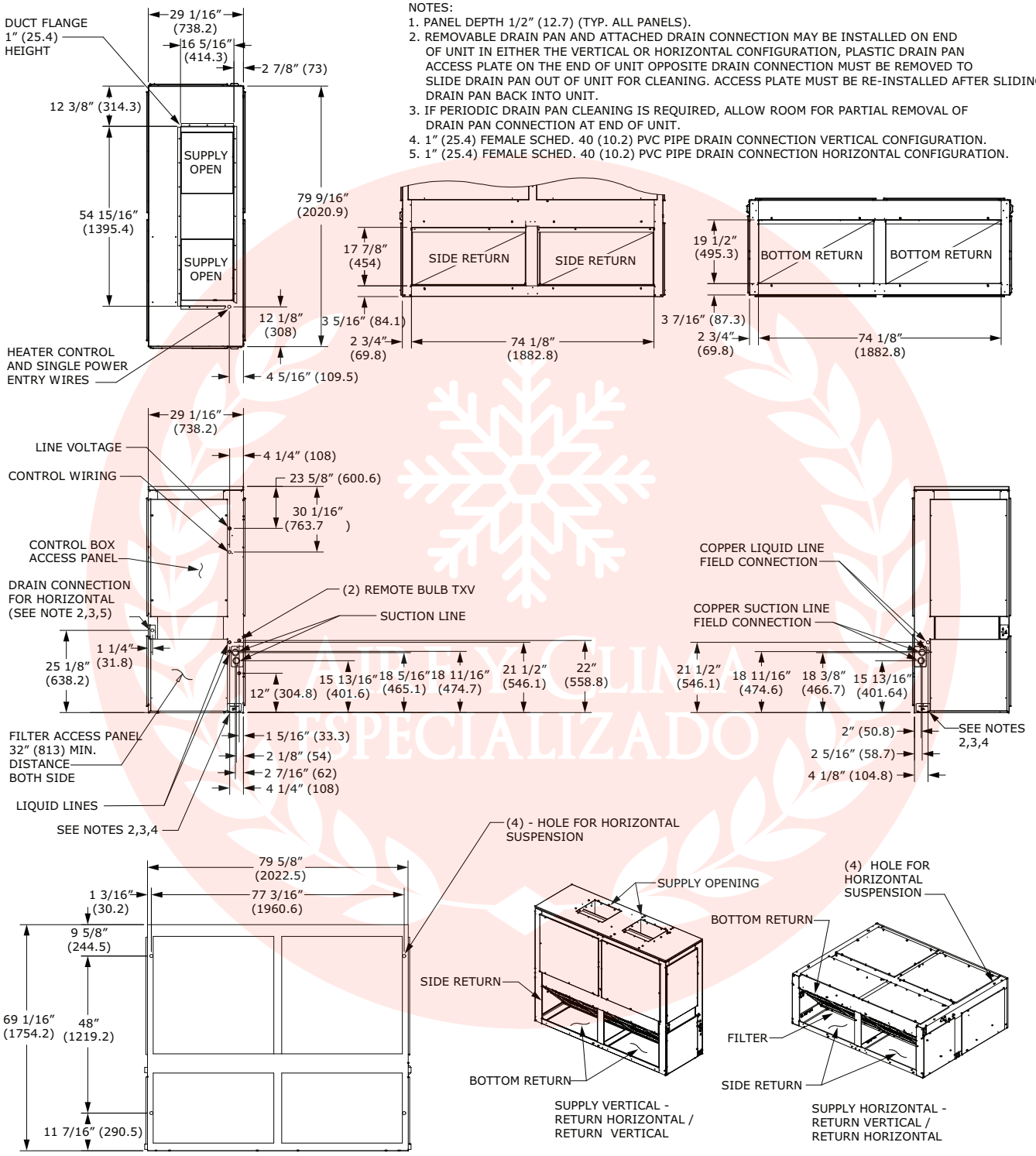

Figure 12. 16.7, 20.9, 20, 25 ton air handler, dual circuit – in. (mm)

Note: *Duct flange is a field-installed accessory.*

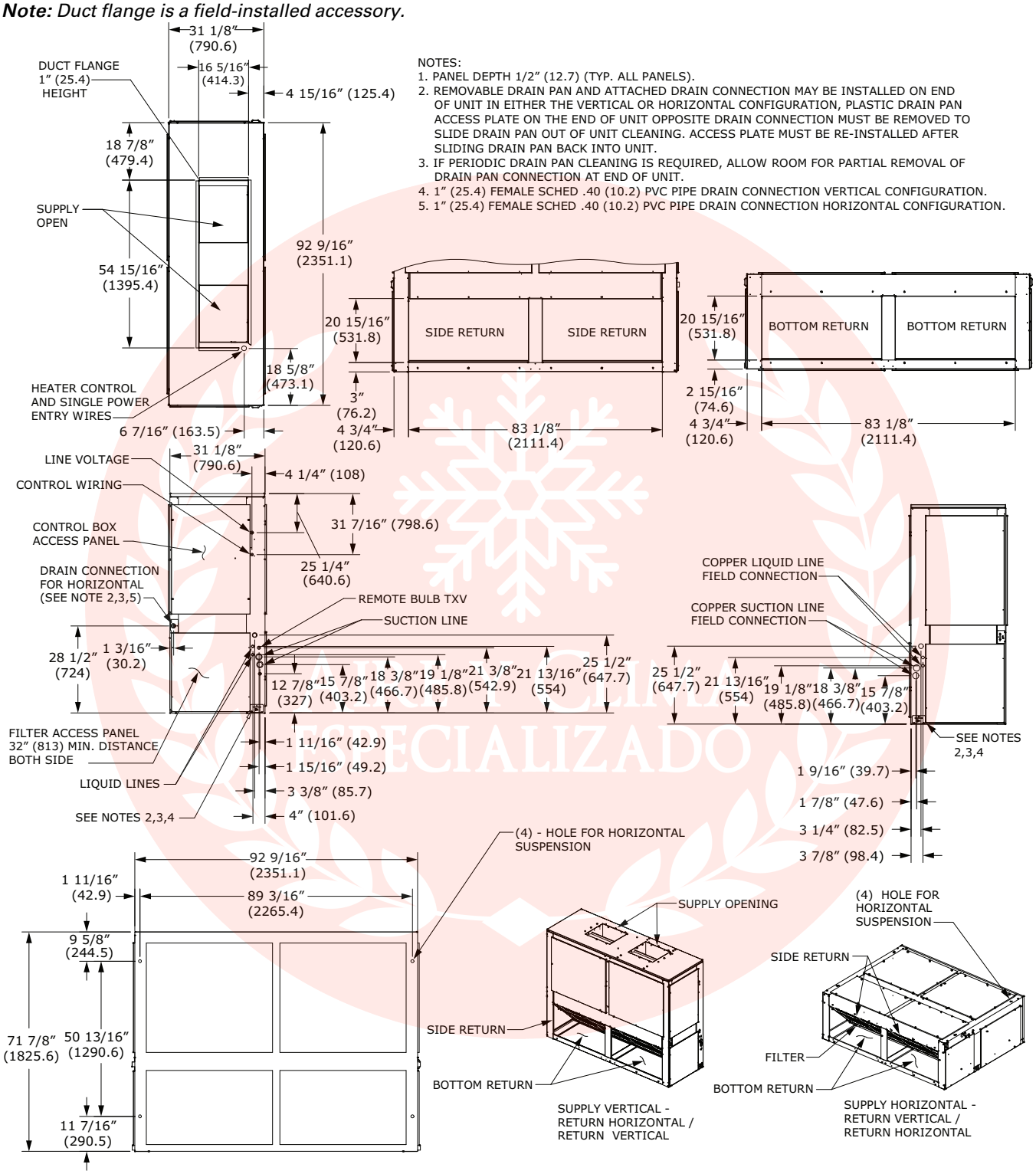

Weights

Air Handler

Table 1. Constant volume air handler (TWE) — unit and corner weights - (60 Hz)

Tons	Model Number	Shipping Max (lbs)	Net Max (lbs)	Corner Weights - Vertical				Corner Weights - Horizontal			
				1	2	3	4	1	2	3	4
5	TWE0604(3,4,W,K)A TWE0604(3,4)B	285	232	55	71	51	55	54	67	50	61
6	TWE0724KB	385	323	67	99	75	82	56	92	87	88
7.5	TWE0904(1,K)A/B	385	323	67	99	75	82	56	92	87	88
10	TWE1204(1,K)A/B	441	393	77	121	110	85	79	118	77	119
12.5	TWE1504KB	753	676	168	192	181	135	196	164	145	171
15	TWE1804KB	752	675	167	192	181	135	196	163	145	171
20	TWE2404KB	912	818	258	168	161	231	256	181	146	235
25	TWE3004KB	993	899	211	229	184	275	272	176	228	223

Table 2. SZVAV and 2-Speed VFD air handler (TWE) — unit and corner weights - (60 Hz)

Tons	Model Number	Shipping Max (lbs)	Net Max (lbs)	Corner Weights - Vertical				Corner Weights - Horizontal			
				1	2	3	4	1	2	3	4
6	TWE0724*B	398	336	70	102	78	86	59	95	90	92
7.5	TWE0904*B	398	336	70	102	78	86	59	95	90	92
10	TWE1204*A/B	454	406	80	124	113	89	82	121	80	123
12.5	TWE1504*B	766	689	171	195	184	139	199	167	148	175
15	TWE1804*B	765	688	170	195	184	139	199	166	148	175
20	TWE2404*B	925	831	261	171	164	235	259	184	149	239
25	TWE3004*B	1015	921	217	235	189	280	278	182	233	228

Table 3. Constant volume air handler (TWE) — unit and corner weights - (50 Hz)

Tons	Model Number	Shipping Max (lbs)	Net Max (lbs)	Corner Weights - Vertical				Corner Weights - Horizontal			
				1	2	3	4	1	2	3	4
4.6	TWE0514DA	285	232	55	71	51	55	54	67	50	61
6	TWE0724DB	385	323	67	99	75	82	56	92	87	88
6.25	TWE0764DA/B	385	323	67	99	75	82	56	92	87	88
8.33	TWE1014DA/B	441	393	77	121	110	85	79	118	77	119
10.4	TWE1264DB	753	676	168	192	181	135	196	164	145	171
13	TWE1564DB	752	675	167	192	181	135	196	163	145	171
16.7	TWE2014DB	912	818	258	168	161	231	256	181	146	235
20.9	TWE2514DB	993	899	211	229	184	275	272	176	228	223

Figure 13. Vertical — TWE051, 072, 076, 101, 060, 072, 090, 120

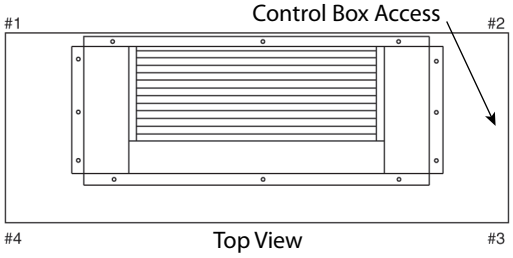

Figure 14. Vertical — TWE126, 156, 201, 126, 156, 201, 251, 180, 240, 150, 180, 240, 300

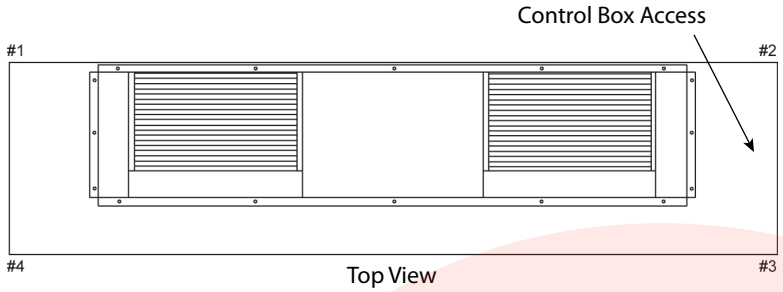

Figure 15. Horizontal — TWE051, 072, 076, 101, 060, 072, 090, 120

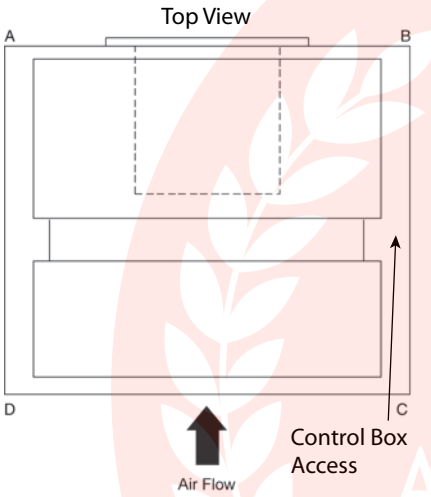

Figure 16. Horizontal — TWE126, 156, 201, 126, 156, 201, 251, 180, 240, 150, 180, 240, 300

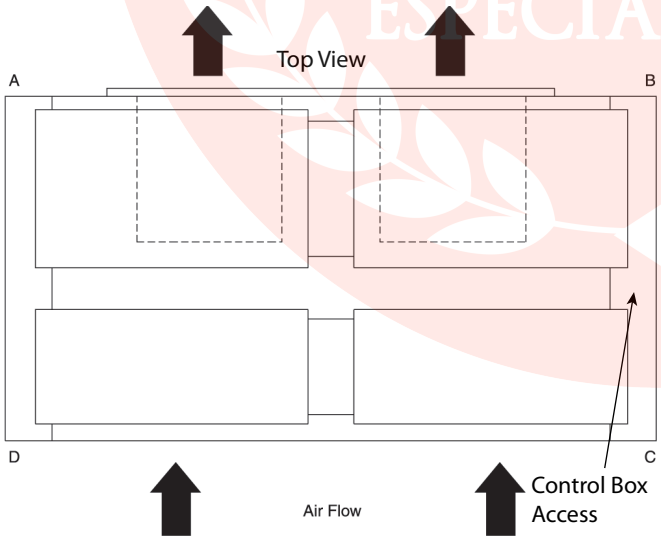

AIRE Y CLIMA
ESPECIALIZADO

Accessories

Table 4. Accessory weights (net lbs.)

Unit Used w/ Tons	Hot Water Coil	Steam Coil	Discharge Plenum and Grille with Hydronic Heat	Discharge Plenum and Grille without Heat	Discharge Plenum and Grille with Electric Heat	Return Air Grille	Electric Heat Min/ Max	Subbase	Oversized Motor	RIS Isolator Floor Mount
5	86	94	63	58	115	3	32/43	14.4	31	2
6	116	131	78	73	160	5	27/45	19.4	48	2
6.25	116	131	78	73	160	5	27/45	19.4	48	2
7.5	116	131	78	73	160	5	27/45	19.4	48	2
8.33	165	148	97	92	195	7	27/45	23.5	50	2
10	165	148	97	92	195	7	27/45	23.5	50	2
10.4	211	234	—	230	235	10	79/100	28.4	80	2
12.5	211	234	—	230	235	10	79/100	28.4	80	2
13	211	234	—	230	235	10	79/100	28.4	80	2
15	211	234	—	230	235	10	79/100	28.4	80	2
16.7	242	261	—	145	265	12	79/100	31.7	88	2
20	242	261	—	145	265	12	79/100	31.7	88	2
20.9	242	261	—	145	265	12	79/100	31.7	—	2
25	242	261	—	145	265	12	79/100	31.7	—	2

Unit Used w/ Tons	RIS Isolator Suspend-ed Mount	Steel Spring Isolator Floor Mount	Steel Spring Isolator Suspend-ed Mount	Hail Guard	Control Trans-former	Sensors	Expansion Module	Low Ambient	Service Valve
5	9	12	6	21	4	—	13	13	5
6	6	12	6	21	4	1	13	13	5
6.25	6	12	6	21	4	—	13	13	5
7.5	6	12	6	21	4	1	13	13	5
8.33	7	12	6	28	4	—	13	13	5
10	7	12	6	28	4	1	13	13	5
10.4	7	12	6	33	4	—	13	13	5
12.5	7	12	6	33	4	1	13	13	5
13	7	12	6	55	4	—	2	2	5
15	7	12	6	55	4	1	2	2	5
16.7	9	12	6	55	4	—	2	2	5
20	9	12	6	55	4	1	2	2	5
20.9	9	12	6	71	4	—	2	2	5
25	9	12	6	71	4	1	2	2	5

Installation

Horizontal Suspension

If the air handler will be suspended, use a suspension mounting kit to isolate the unit from the structure. This is usually accomplished with spring or rubber isolators, which are offered as an accessory.

Mounting rods must be field supplied. Isolator selection is dependent upon total unit weight including accessories — see "Weights," p. 20 for approximate unit and accessory weights.

NOTICE

Equipment Damage!

Before hanging the unit on suspension rods, reinforce the cabinet around the suspension holes by using a large washer inside the cabinet. Washers should be between the skin of the air handler and the nut on the suspension rod.

Align holes in the cabinet with structural supports and secure suspension rods to the structure, then to the air handler cabinet. If hole locations do not permit proper alignment with existing structure, it may be necessary to field fabricate cross members on existing structural beams.

Note: *When other than bottom return is to be used, side panel removal for return duct installation must be secured over the bottom opening.*

Leveling

This air handler has a double sloped drain pan. In order to assure proper drainage along the length of the drain pan, it is important to have the unit properly leveled. Be sure the air handler is level.

Auxiliary Drain Pan

A field fabricated, auxiliary drain pan should be installed under the unit for all horizontal applications and when air handlers are installed above ceilings or in other locations where condensate overflow may cause damage.

This drain pan will eliminate any excess condensation that may be due to extreme humidity or an obstructed drain in the primary drain pan. Drain lines from this pan must be installed, but should not be connected to the primary drain line from the unit. Isolate the auxiliary drain pan from both the air handler and the structure.

Refrigerant Piping

Installation, brazing, leak testing and evacuation of refrigerant lines are covered in the installation instructions that shipped with the outdoor unit. Read the instructions before beginning installation of refrigerant lines.

NOTICE

Equipment Damage!

Ensure that the refrigerant lines passing through the cabinet are not resting on sharp sheet metal edges and that the bulb(s) are attached to the suction line of the same circuit.

1. Locate cloth bag(s) that contains a stainless steel clamp and insulation material (approximately 9" long by 4" wide) for each refrigerant circuit. This is for attaching and insulating the expansion valve bulb(s) to the suction line(s).
2. Attach the expansion valve bulb(s)

   on air handlers that will have refrigerant lines entering the cabinet from the left side:

   a. Remove the split rubber grommet from the knockout in the end of the air handler. Uncoil the cap tube with the bulb attached at the expansion valve and place the grommet on the cap tube.

   b. With the grommet around the tube, push the bulb through the hole and position the grommet back into its original position (one bulb and cap tube on single circuit units, and two bulbs and cap tubes on dual circuit units).

   on air handlers that will have refrigerant lines entering the cabinet from the right side:

   a. Attach the bulb(s) to the suction tube(s) inside the cabinet, approximately 10" from the right end of the unit.
3. Attach the bulb(s) on a horizontal section of tube where the entire length of the bulb is in contact with the tube (see Figure 17, p. 24), approximately 45 degrees off vertical (a 10 or 2 o'clock position).
4. After attaching to the suction line(s), either inside or outside of the cabinet, wrap the insulation around the bulb(s) and suction tube(s).

Note: *Suction piping should be insulated.*

AIRE Y CLIMA ESPECIALIZADO

⚠ WARNING

Fiberglass Wool!

Exposure to glass wool fibers without all necessary PPE equipment could result in cancer, respiratory, skin or eye irritation, which could result in death or serious injury. Disturbing the insulation in this product during installation, maintenance or repair will expose you to airborne particles of glass wool fibers and ceramic fibers known to the state of California to cause cancer through inhalation.

You MUST wear all necessary Personal Protective Equipment (PPE) including gloves, eye protection, a NIOSH approved dust/mist respirator, long sleeves and pants when working with products containing fiberglass wool.

Precautionary Measures:

- **Avoid breathing fiberglass dust.**
- **Use a NIOSH approved dust/mist respirator.**
- **Avoid contact with the skin or eyes. Wear long-sleeved, loose-fitting clothing, gloves, and eye protection.**
- **Wash clothes separately from other clothing; rinse washer thoroughly.**
- **Operations such as sawing, blowing, tear-out, and spraying may generate fiber concentrations requiring additional respiratory protection. Use the appropriate NIOSH approved respirator.**

First Aid Measures:

- **Eye Contact - Flush eyes with water to remove dust. If symptoms persist, seek medical attention.**
- **Skin Contact - Wash affected areas gently with soap and warm water after handling.**

Figure 17. Remote bulb installation

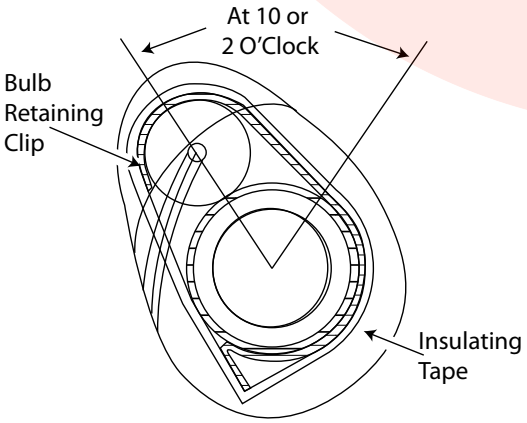

Condensate Piping

The drain pan condensate connection is a female slip joint type for 1" Schedule 40 PVC pipe. Use PVC cement and tubing as required (field supplied) to construct a trap. A union or flexible tubing and clamps may be installed if the drain pan is to be removed periodically for cleaning.

Note: *When air handler is installed in the vertical position and close proximity trapping of condensate is required, use of a subbase accessory to raise the air handler for clearance of the drain trap is recommended. See Figure 18, p. 24 for a typical drain trap assembly.*

Figure 18. Typical drain trap assembly

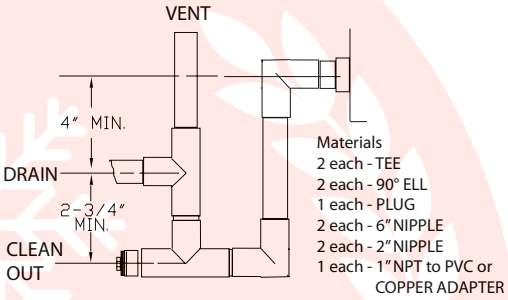

Important: *Properly support the drain line to prevent the drain pan connection from cracking.*

AIRE Y CLIMA ESPECIALIZADO

Filter Replacement

⚠ WARNING

Fiberglass Wool!

Exposure to glass wool fibers without all necessary PPE equipment could result in cancer, respiratory, skin or eye irritation, which could result in death or serious injury. Disturbing the insulation in this product during installation, maintenance or repair will expose you to airborne particles of glass wool fibers and ceramic fibers known to the state of California to cause cancer through inhalation.

You MUST wear all necessary Personal Protective Equipment (PPE) including gloves, eye protection, a NIOSH approved dust/mist respirator, long sleeves and pants when working with products containing fiberglass wool.

Precautionary Measures:

- **Avoid breathing fiberglass dust.**
- **Use a NIOSH approved dust/mist respirator.**
- **Avoid contact with the skin or eyes. Wear long-sleeved, loose-fitting clothing, gloves, and eye protection.**
- **Wash clothes separately from other clothing; rinse washer thoroughly.**
- **Operations such as sawing, blowing, tear-out, and spraying may generate fiber concentrations requiring additional respiratory protection. Use the appropriate NIOSH approved respirator.**

First Aid Measures:

- **Eye Contact - Flush eyes with water to remove dust. If symptoms persist, seek medical attention.**
- **Skin Contact - Wash affected areas gently with soap and warm water after handling.**

Air handlers are shipped with throwaway filters installed.

Note: *2'' Merv 13 filters are available for field install option only.*

To replace filters from the end of the unit, remove lower access panel (either end) and slide old filters out and replace with new ones.

To replace from the front of the unit, remove one “L” shaped angle. Remove and replace filters and reinstall “L” shaped angle. See Figure 19, p. 25.

To convert from 1” filter to a 2” filter on units so equipped, remove lower access panels from both ends of the air handler. Remove screws and rotate the “L” shaped angles from both the top and bottom of the filter track 180° to increase the width of the filter opening.

Figure 19. Filter location

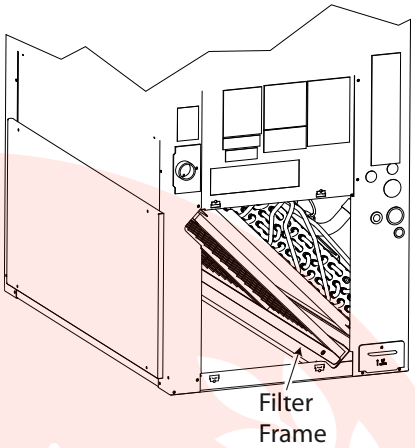

Duct Connections

The supply and return ducts should be connected to the unit with flame retardant duct connectors to reduce vibration transmission. The return duct should be sized to the same dimensions as the return inlet of the unit.

Important: *Duct flanges are provided for attachment of the duct work and are packaged on the outside of the cabinet for TWE150, 180, 240, 300 and TWE126, 156, 201, 251. The duct flanges are fastened to the pallet below the coil (bottom return) on the TWE051, 060, 072, 076, 090, 101 and 120 models.*

Air Flow Settings

Airflow options for this unit can be set to Constant Volume, Two Speed Fan, and Single Zone VAV Fan. Correct configuration and airflow adjustment instructions can be found in the Startup section of this manual.

Electrical Wiring

⚠ WARNING

Hazardous Voltage w/Capacitors!

Failure to disconnect power and discharge capacitors before servicing could result in death or serious injury.

Disconnect all electric power, including remote disconnects and discharge all motor start/run capacitors before servicing. Follow proper lockout/tagout procedures to ensure the power cannot be inadvertently energized. For variable frequency drives or other energy storing components provided by Trane or others, refer to the appropriate manufacturer's literature for allowable waiting periods for discharge of capacitors. Verify with a CAT III or IV voltmeter rated per NFPA 70E that all capacitors have discharged.

⚠ WARNING

Proper Field Wiring and Grounding Required!

Failure to follow code could result in death or serious injury.

All field wiring MUST be performed by qualified personnel. Improperly installed and grounded field wiring poses FIRE and ELECTROCUTION hazards. To avoid these hazards, you MUST follow requirements for field wiring installation and grounding as described in NEC and your local/state/national electrical codes.

1. All electrical lines, sizing, protection, and grounding must be in accordance with the National Electric Code and local codes.
2. Isolate conduit whenever vibration transmission may cause a noise problem within the building structure.
3. Ensure all connections are tight and no wires exposed.
4. All accessories must be installed and wired according to the instructions packaged with that accessory.

   For air handler power entry only, or for dual power entry (power entry for air handler and power entry for electric heat), the electrical connections are made in the fan control box located in the right side of the air handler and electric heater respectively. Wiring entrance is through holes provided in the end of the air handler cabinet, Figure 20, p. 26. Breaker or fuse size can be selected using the nameplates attached to the unit and electric heater.

Figure 20. Electrical entries

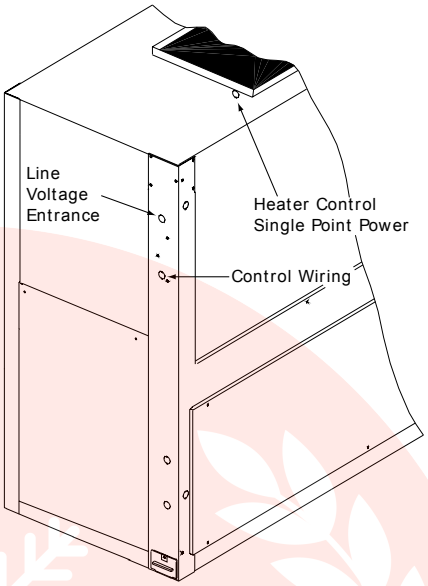

Unit Power Supply

The installer must provide line voltage circuit(s) to the unit main power terminals as shown by the unit wiring diagrams. Adhesive backed diagrams are affixed inside the control box cover panel. Wiring diagrams are also available through e-Library or by contacting a local sales office. Power supply must include a disconnect switch in a location convenient to the unit. Ground the unit according to local codes and provide flexible conduit if codes require and/or if vibration transmission may cause noise problems.

Important: *All wiring must comply with applicable local and national (NEC) codes. Type and location of disconnect switches must comply with all applicable codes.*

⚠ WARNING

Proper Field Wiring and Grounding Required!

Failure to follow code could result in death or serious injury.

All field wiring MUST be performed by qualified personnel. Improperly installed and grounded field wiring poses FIRE and ELECTROCUTION hazards. To avoid these hazards, you MUST follow requirements for field wiring installation and grounding as described in NEC and your local/state/national electrical codes.

NOTICE

Use Copper Conductors Only!

Failure to use copper conductors could result in equipment damage as the equipment was not designed or qualified to accept other types of conductors.

Symbio™ Controls

Wiring shown with dashed lines is to be furnished and installed by the customer. All customer supplied wiring must be copper only and must conform to NEC and local electrical codes. Codes may require line of sight between disconnect switch and unit.

Figure 21. Symbio™ jobsite connections

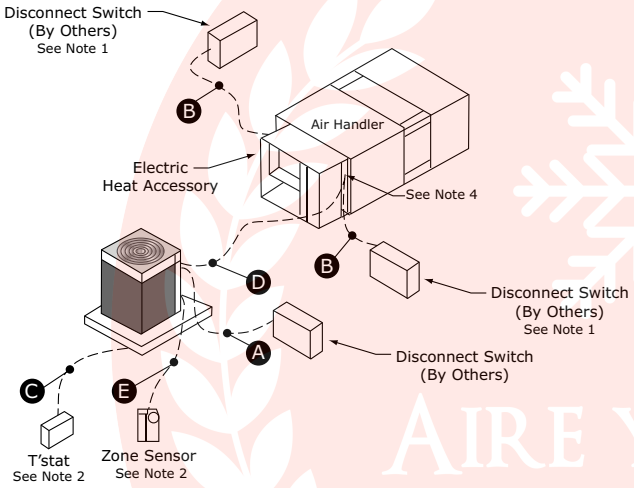

Power Wires

A. 3 wires, line voltage for 3 phase, 1 grounding wire**

B. 3 wires, line voltage for 3 phase, (2 wires for single phase) 1 grounding wire**

Control Wires

C. Cooling only (or Cooling with Heat) thermostat: 4 to 7 wires depending on stages of cooling and electric heat

C. Heat Pump thermostat: 6 to 9 wires depending on T'stat options and stages of cooling and heating

D. Wiring between indoor and outdoor unit: 5 to 11 wires depending on unit control options*

E. Zone Sensor: 4 to 7 wires depending on zone sensor model*

Communication signal wires require shielded twisted pairs.

Use factory-supplied 165 ft. length of Comlink cable with a PVC jacket, 18/1 PR, stranded shield, 25 PF/FT plenum rated for the field communication signal wiring. Refer to wiring diagram schematics for identification of shielded twisted pairs.

Notes:

1. *When electric heater accessory is used, single point power entry or dual point power entry is field optional. Single point power entry option is through electric heater only.*
2. **Choose only one of the following; Thermostat, Mechanical Zone Sensor, Programmable Zone Sensor Panel or BAS Zone Sensor.*
3. ****

⚠ WARNING

Electrical Shock Hazard!

Failure to follow instructions below could result in death or serious injury.

Properly connect the system's oversized protective earthing (grounding) terminal.

4. *Once power wire connections are complete inside the air handler control box, seal the sheet metal entry points of the control box by using parts (neoprene gasket, grommet, and plug) shipped along with the air handler unit package.*

Important: *For the EDC switch to be functional and thereby facilitate reliable unit operation, make the EDC connections from the indoor to the outdoor control boxes.*

AIRE Y CLIMA ESPECIALIZADO

Table 5. Recommended thermostat wire size

Wire Size	Maximum Wire Length
(Gauge)	Physical distance between Unit & T'stat
22	30 Feet
20	50 Feet
18	75 Feet
16	125 Feet
14	200 Feet

Table 6. Zone sensor module wiring

Distance from Unit to Control	Recommended Wire Size
0-150 feet (0-45.7 m)	22 gauge (0.33 mm^2)
151-240 feet (46-73.1 m)	20 gauge (0.50 mm^2)
241-305 feet (73.5-117.3 m)	18 gauge (0.75 mm^2)
386-610 feet (117.7-185.9 m)	16 gauge (1.31 mm^2)
611-970 feet (186.2-295.7 m)	14 gauge (2.08 mm^2)

Installation Checklist

⚠ WARNING

Hazardous Voltage!

Failure to disconnect power before servicing could result in death or serious injury.

Disconnect all electric power, including remote disconnects before servicing. Follow proper lockout/tagout procedures to ensure the power can not be inadvertently energized. Verify that no power is present with a voltmeter.

Complete this checklist once the unit is installed to verify that all recommended procedures have been accomplished before the system is started. Operational checks cannot be performed until the outdoor unit is installed and system interconnection is complete.

- ☐ Verify that the unit electrical power is disconnected.
- ☐ Inspect all field wiring connections. All connections should be clean and tight.
- ☐ Inspect unit ground connection(s). Ground must comply with all applicable codes.
- ☐ Inspect unit suspension arrangement (if used). Unit position must be secure. Remove any tools or debris found in or near the unit.
- ☐ Inspect duct outlets. Outlets must be open and unrestricted.
- ☐ Inspect unit drain lines. Pipe connections must be tight and drain line unrestricted.
- ☐ Inspect fan assembly to insure all moving parts move freely.
- ☐ If unit is horizontally mounted, make sure secondary drain pan has been installed.
- ☐ Inspect unit for proper filters, securely installed and not touching the coil surface. All cabinet panels must be secure.
- ☐ Instruct owner/operator on proper system operating and maintenance procedure.
- ☐ Inspect blower assembly to make sure all bolts and screws are tight.
- ☐ Inspect blower pulley alignment.
- ☐ Inspect factory high and low voltage wiring to make sure all connections are tight and clean.

Low Voltage Wiring

Mount the indoor thermostat, zone sensor, or programmable zone sensor in accordance with the corresponding thermostat installation instructions. Install color-coded, weather-proof, multi-wire cable according to the Condenser and Air Handler Pairing guide (SS-SVN016*-EN).

Note: *Refer to thermostat or zone sensor wire installation guide for proper wire gauge.*

Field Wiring

Refer to the latest version of Condenser and Air Handler Pairing guide (SS-SVN016*-EN) for instructions on field wiring connections.

EDC Switch Wiring

The Evaporator Defrost Control Switch is wired from the factory Normally Open to operate with Symbio™ condensers. For operation with legacy Reliatel™ or Electromechanical condensers, change the wiring on the switch to the Normally Closed position and connect the wires from the switch to the wires from the legacy condenser that control this function.

Checkout Procedure

Complete the "Installation Checklist," p. 28 once installation of field wiring connections is complete. All operational checks (unit running) must be made after the outdoor unit is installed and system interconnection is complete.

AIRE Y CLIMA ESPECIALIZADO

Startup

Heating and Cooling Setpoint Arbitration

All control function setpoints are set through one of the Symbio™ 700 user interfaces. If no changes are made, the controller will operate, as configured, based on the default settings. Refer to the Symbio 700 Controller with Odyssey Split Systems Application Guide for details about which setpoints are required per application.

Constant Volume Units

(Unit model number digit 15 = "1")

Unit is shipped for nominal airflow with nominal static pressure. Please refer to the fan performance table in the product catalog and select the proper drive package for each application. Failure to do so could result in improper airflow causing coil frosting or condensate management problems. Condensate management problems such as water blow off could be the result of too great of air face velocity across the coil. To ensure proper operation refer to "Fan Belt Adjustment," p. 43.

SZVAV and Two Speed Air-Handling Units with Symbio™ Condenser Units

(Unit Model Number Digit 15 = "D")

The Symbio 700 controller provides integrated Supply Fan speed setpoint control for paired air handler units with VFDs for SZVAV and Two Speed fan operation. These setpoints can be manipulated through the Symbio 700 user interface (including the Symbio Service and Installation app) or through a connected BAS if required.

Figure 22. Supply Fan speed setpoints

AIRE Y CLIMA
ACTUALIZADO

Each setpoint operates as described below.

Supply Fan Maximum Speed Setpoint (Range: 67-100%, Default: 100%)

The Supply Fan Maximum Speed Setpoint correlates to the maximum reference setting in the VFD (defaulted to 60Hz from the factory). With the Supply Fan Maximum Speed Setpoint at its default value of 100%, and parameter 6-15 in the VFD at its default value of 60Hz, the maximum VFD output will be 60Hz. If the user chooses to reduce the Supply Fan Maximum Speed Setpoint, it will effectively reduce the maximum VFD output from its configured value. See the example below:

Example:

Parameter 6-15 in the VFD = 60Hz

Supply Fan Maximum Speed Setpoint = 80%

Effective Supply Fan Maximum VFD Output = 80% x 60Hz =48Hz

If the desired maximum operating point from the catalog fan table is lower than 40Hz, parameter 6-15 on the VFD must be reprogrammed to 50 Hz. The VFD is preset from the factory to a default of 25 Hz for the lower limit and does not need to be reprogrammed.

Supply Fan Minimum Speed Setpoint (Range: 0-100%, Default: 0%)

The Supply Fan Minimum Speed Setpoint correlates to the minimum reference setting in the VFD (25Hz from the factory). With the Supply Fan Minimum Speed Setpoint at its default value of 0%, and parameter 6-14 in the VFD at its default value of 25hz, the minimum VFD output will be 25Hz. If the user chooses to increase the supply Fan Minimum Speed Setpoint, it will effectively increase the minimum VFD output from its configured value, up to the Effective Supply Fan Maximum VFD Output as determined by the Supply Fan Maximum Speed Setpoint. See the example below:

Example:

Parameter 6-14 in the VFD = 25Hz

Effective Supply Fan Maximum VFD Output (based on Supply Fan Maximum Speed Setpoint) = 60Hz

Supply Fan Minimum Speed Setpoint = 50%

Effective Supply Fan Minimum VFD Output =

(Effective Supply Fan Maximum VFD Output – VFD Parameter 6-14) x 50% + 25Hz = 42.5Hz

Table 7. Maximum fan speed setpoints and effective supply fan maximum VFD output

When VFD Parameter 6-15 = 60Hz				When VFD Parameter 6-15 = 50Hz			
Supply Fan Maximum Speed Setpoint	**Effective Supply Fan Maximum VFD Output (Hz)**	**Supply Fan Maximum Speed Setpoint**	**Effective Supply Fan Maximum VFD Output (Hz)**	**Supply Fan Maximum Speed Setpoint**	**Effective Supply Fan Maximum VFD Output (Hz)**	**Supply Fan Maximum Speed Setpoint**	**Effective Supply Fan Maximum VFD Output (Hz)**
100%	60	83%	49.8	100%	50	83%	41.5
99%	59.4	82%	49.2	99%	49.5	82%	41
98%	58.8	81%	48.6	98%	49	81%	40.5
97%	58.2	80%	48	97%	48.5	80%	40
96%	57.6	79%	47.4	96%	48	79%	39.5
95%	57	78%	46.8	95%	47.5	78%	39
94%	56.4	77%	46.2	94%	47	77%	38.5
93%	55.8	76%	45.6	93%	46.5	76%	38
92%	55.2	75%	45	92%	46	75%	37.5
91%	54.6	74%	44.4	91%	45.5	74%	37
90%	54	73%	43.8	90%	45	73%	36.5
89%	53.4	72%	43.2	89%	44.5	72%	36
88%	52.8	71%	42.6	88%	44	71%	35.5
87%	52.2	70%	42	87%	43.5	70%	35
86%	51.6	69%	41.4	86%	43	69%	34.5
85%	51	68%	40.8	85%	42.5	68%	34
84%	50.4	67%	40.2	84%	42	67%	33.5

Table 8. Minimum VFD speed ranges

Effective Supply Fan Maximum VFD Output (Hz)	Minimum Speed Range (60 Hz)		Effective Supply Fan Maximum VFD Output (Hz)	Minimum Speed Range (60 Hz)	
	Min	Max		Min	Max
60	25	60	49.8	25	49.8
59.4	25	59.4	49.2	25	49.2
58.8	25	58.8	48.6	25	48.6
58.2	25	58.2	48	25	48
57.6	25	57.6	47.4	25	47.4
57	25	57	46.8	25	46.8
56.4	25	56.4	46.2	25	46.2
55.8	25	55.8	45.6	25	45.6
55.2	25	55.2	45	25	45
54.6	25	54.6	44.4	25	44.4
54	25	54	43.8	25	43.8
53.4	25	53.4	43.2	25	43.2
52.8	25	52.8	42.6	25	42.6
52.2	25	52.2	42	25	42
51.6	25	51.6	41.4	25	41.4
51	25	51	40.8	25	40.8
50.4	25	50.4	40.2	25	40.2

Symbio™ Condenser Configuration Management

The Symbio™ 700 controller in the Odyssey condenser must be properly configured to integrate appropriately with various air handler configurations. As shipped from the factory, the Symbio 700 in the condenser is configured to be integrated with a single-speed, constant volume air handler. If the air handler paired with the condenser is a two-speed or SZVAV configuration, the Symbio 700 configuration must be updated in the condenser. This configuration update can be made through either of the user interfaces on the Symbio 700, including the Mobile Service and Installation app.

Two-Speed Air Handler Systems

To configure the Symbio 700 for two-speed air handler systems use the following steps and refer to through :

1. In the Mobile Service and Installation app, tap **Settings**.
2. Tap **Configuration**.
3. Tap **Edit**.
4. Tap **Indoor Fan Type**.
5. Select **Multi Speed**.
6. Tap **Apply**.
7. Verify that all settings are correct.

Figure 23. Edit configuration

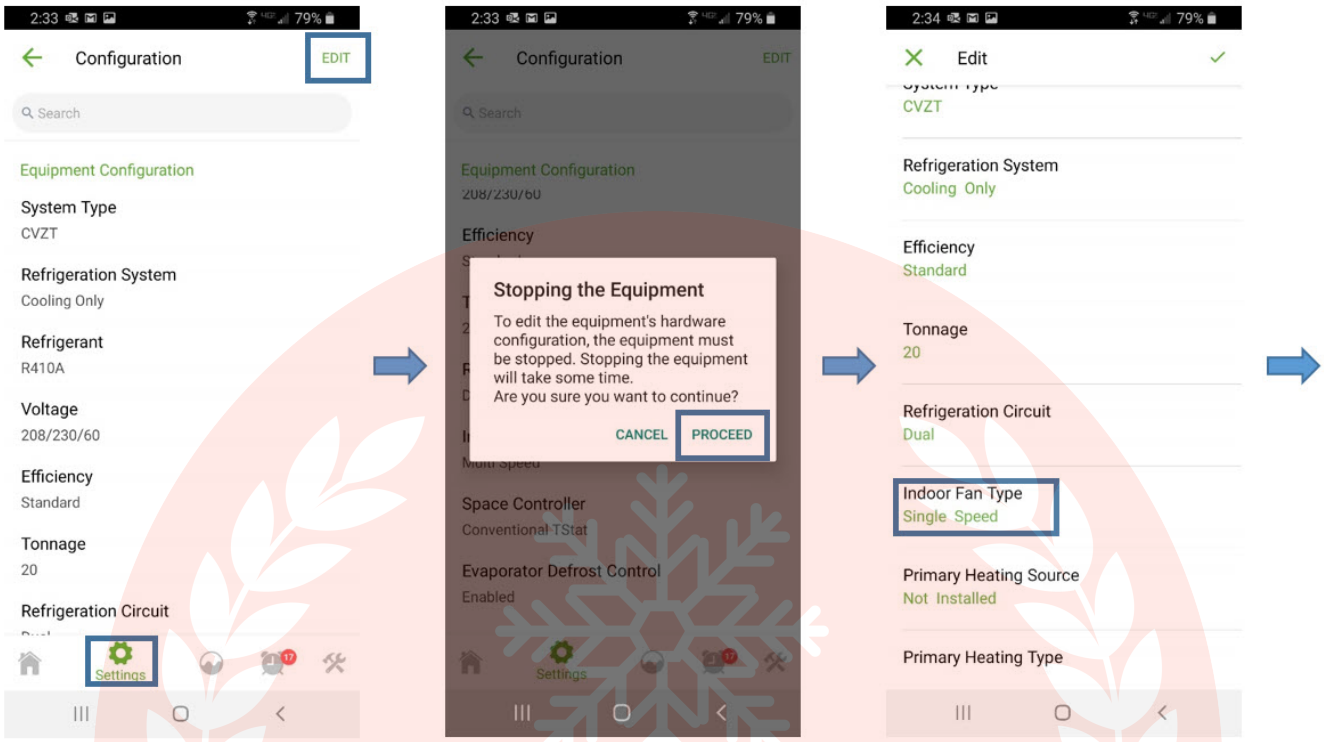

Figure 24. Select multi speed and apply changes

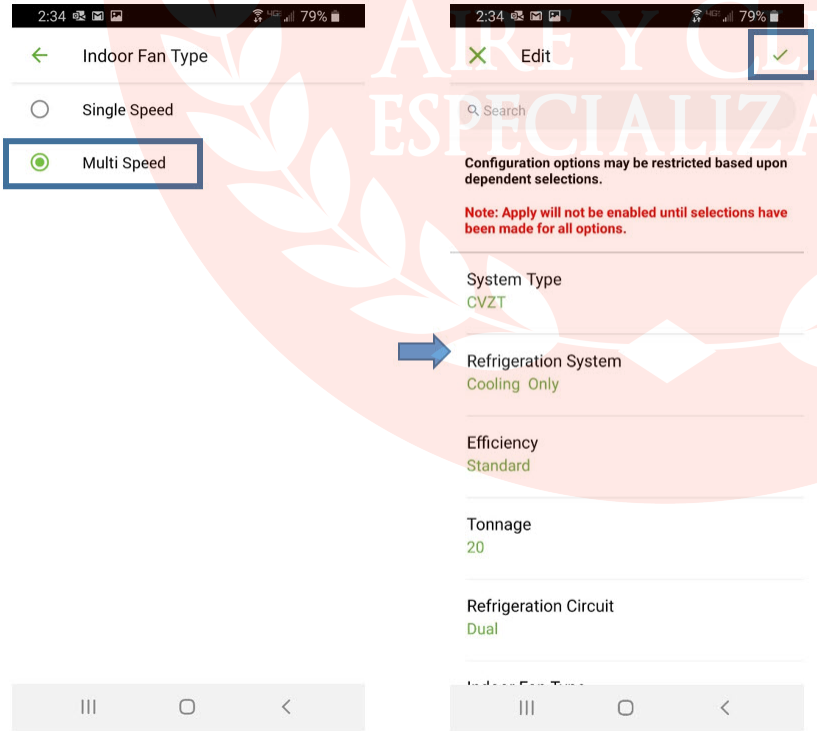

AIRE Y CLIMA ESPECIALIZADO

Figure 25. Verify changes

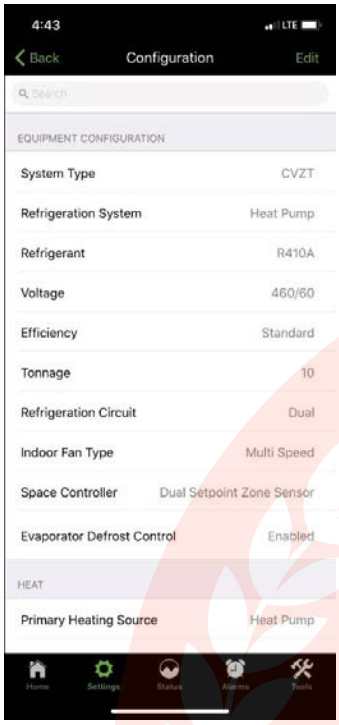

AIRE Y CLIMA ESPECIALIZADO

SZVAV Air Handler Systems

To configure the Symbio 700 for SZVAV air handler systems use the following steps and refer to through Figure 28, p. 36:

1. In the Mobile Service and Installation app, tap **Settings**.
2. Tap **Configuration**.
3. Tap **Edit**.
4. Tap **System Type**.
5. Select **VVZT**.
6. Tap **Apply**.
7. Verify that all settings are correct.

Figure 26. Edit configuration

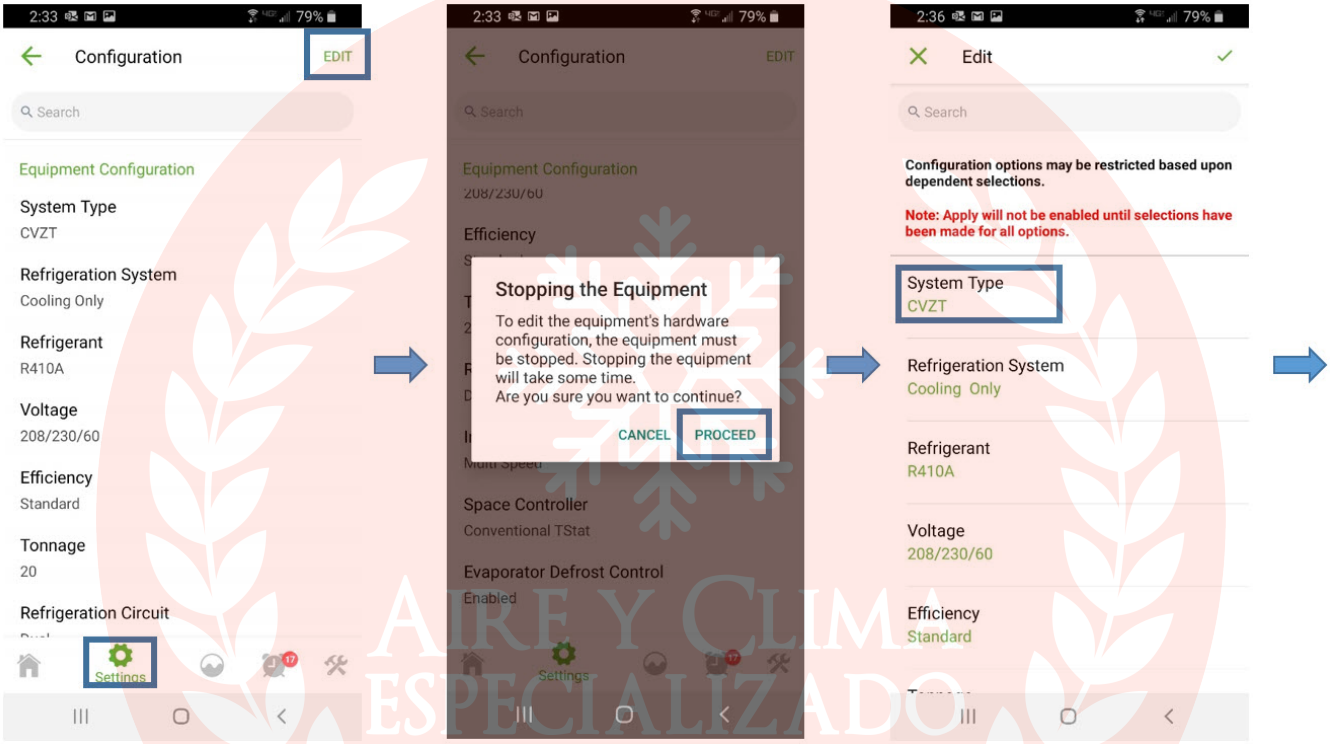

Figure 27. System type

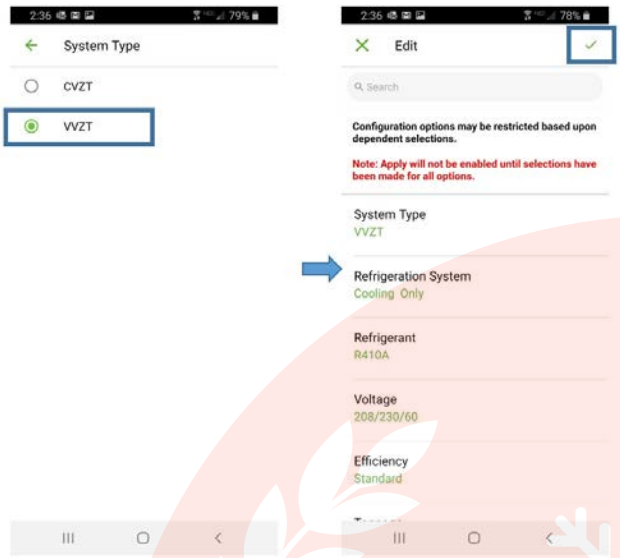

Figure 28. Verify changes

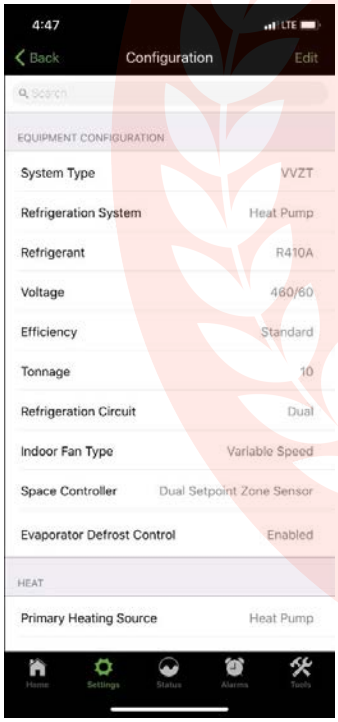

AIRE Y CLIMA ESPECIALIZADO

Field Installed Electric Heat Kits

When Electric Heat Kits are installed into an Odyssey Air Handler paired with a Symbio 700 controlled condenser, configure the Symbio 700 controller so that the electric heat control sequences and output signals will be generated. Use the following steps and refer to through .

1. In the Mobile Service and Installation app, tap **Settings**.
2. Tap **Configuration**.
3. Tap **Edit**.
4. Tap **Primary Heating Source**.
5. Tap **Electric**.
6. Tap **Primary Heating Source**.
7. Select **1 or 2**.
8. Tap **Apply**.
9. Verify that all settings are correct.

Figure 29. Edit configuration

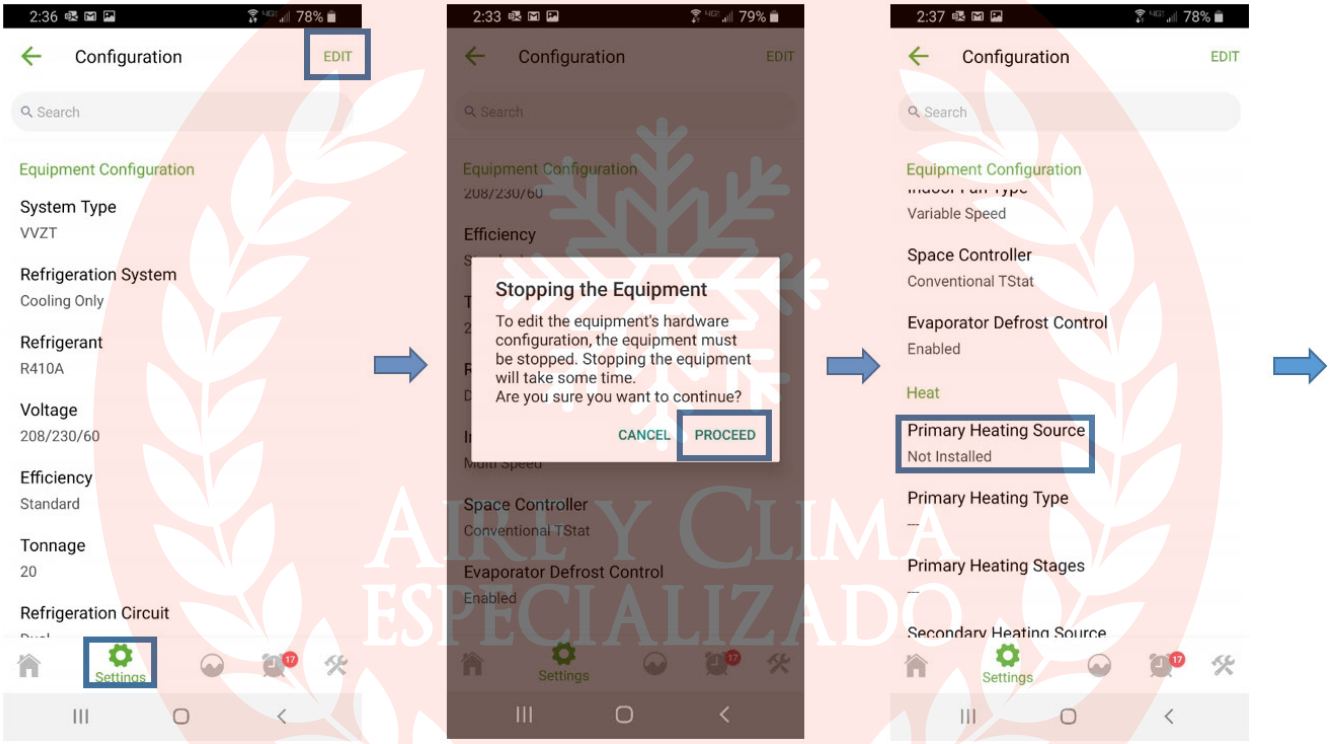

Figure 30. Select primary heating source

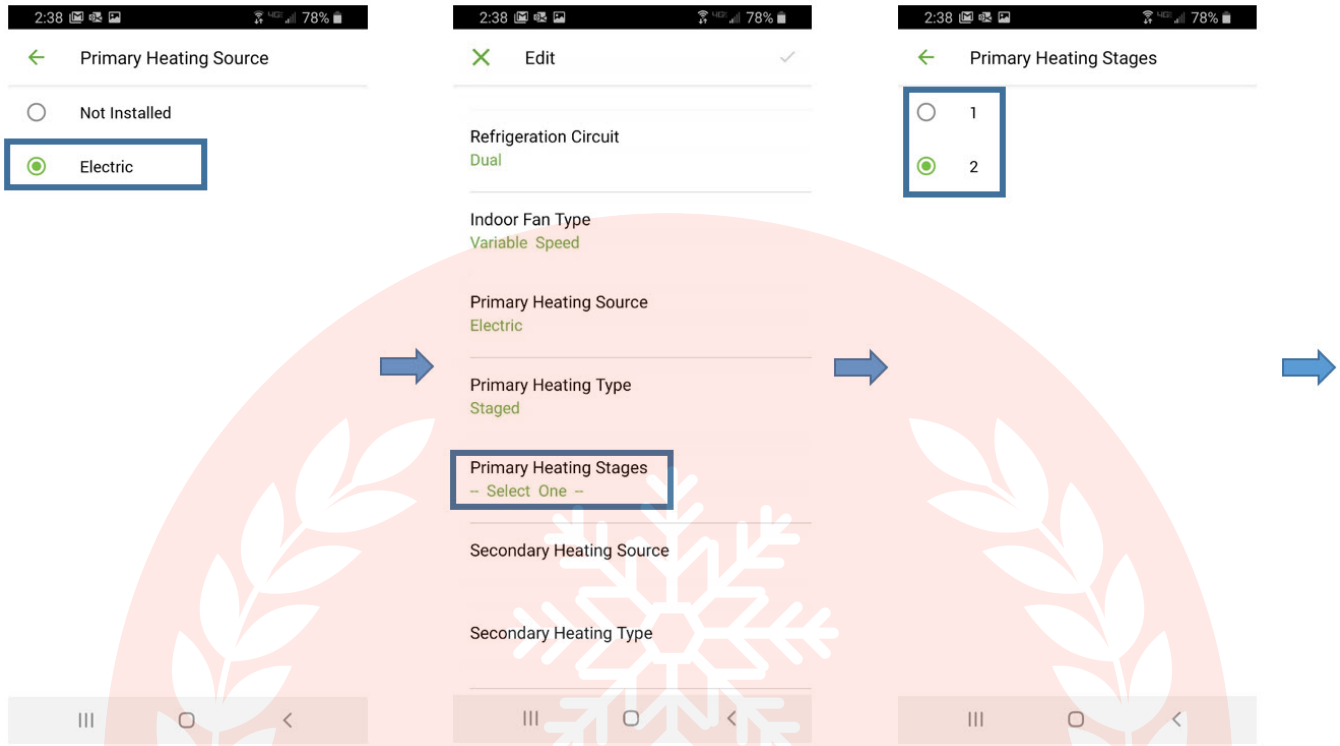

AIRE Y CLIMA
ESPECIALIZADO

Figure 31. Apply edits

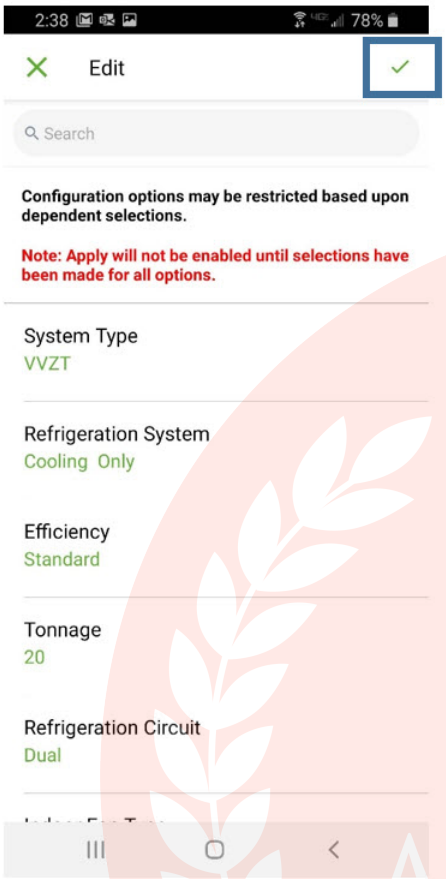

Figure 32. Verify changes

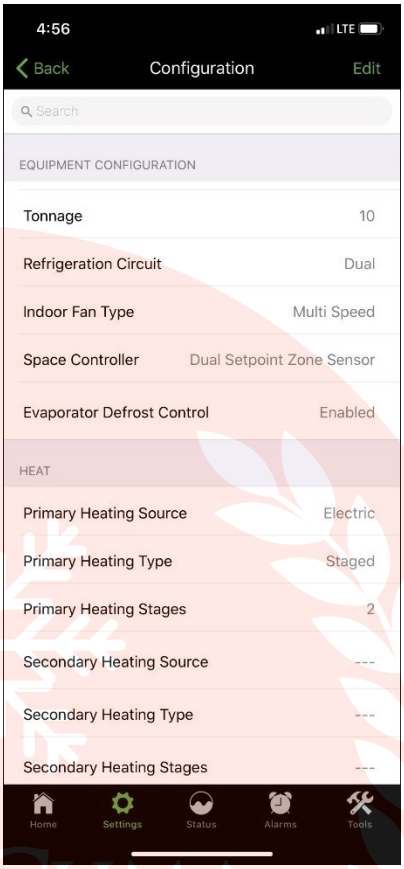

AIRE Y CLIMA ESPECIALIZADO

Electric Heat as Secondary Heat (Heat Pump Systems)

To configure Electric Heat as Secondary Heat (Heat Pump Systems) use the following steps and refer to Figure 33, p. 40 through Figure 36, p. 42:

1. In the Mobile Service and Installation app, tap **Settings**.
2. Tap **Configuration**.
3. Tap **Edit**.
4. Tap **Secondary Heating Source**.
5. Tap **Electric**.
6. Tap **Secondary Heating Source**.
7. Select **1 or 2**.
8. Tap **Apply**.
9. Verify that all settings are correct.

Figure 33. Edit configuration

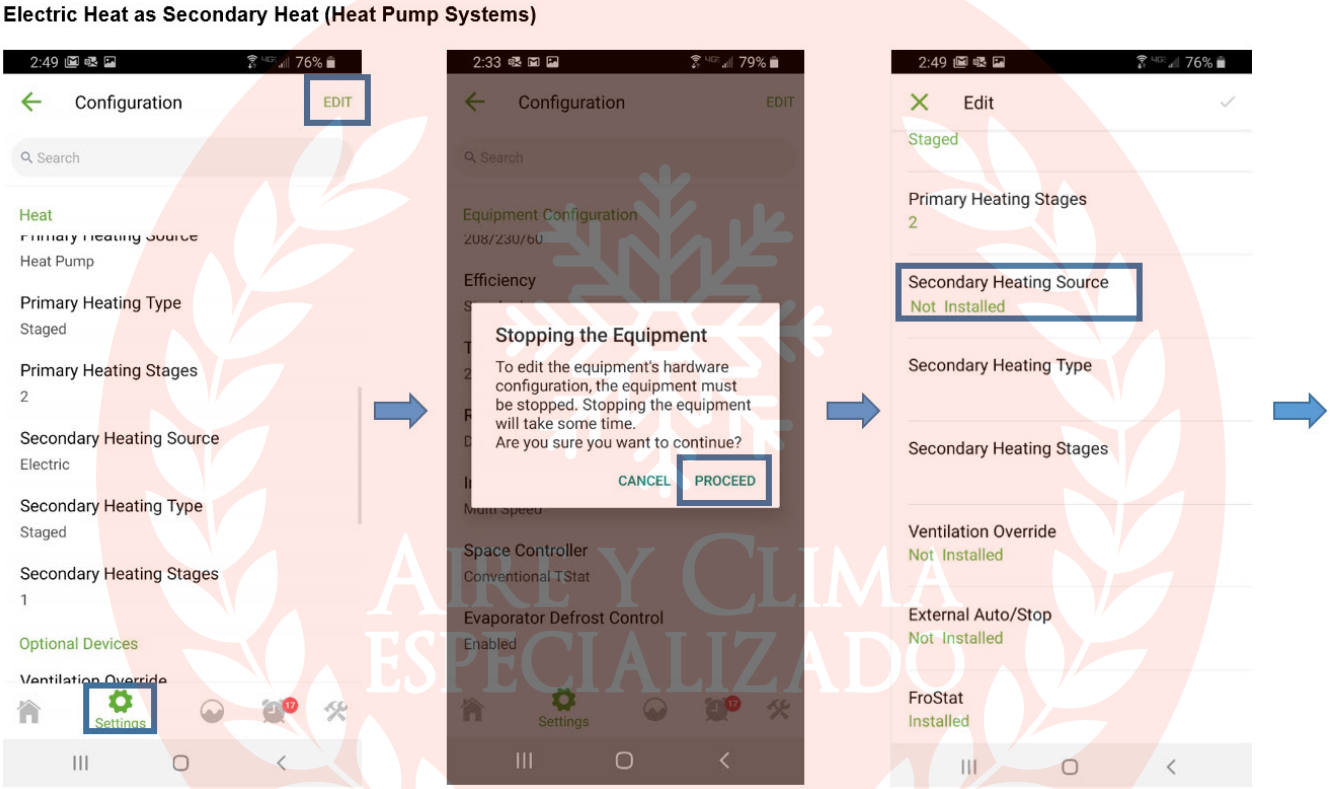

AIRE Y CLIMA ESPECIALIZADO

Figure 34. Select secondary heating source

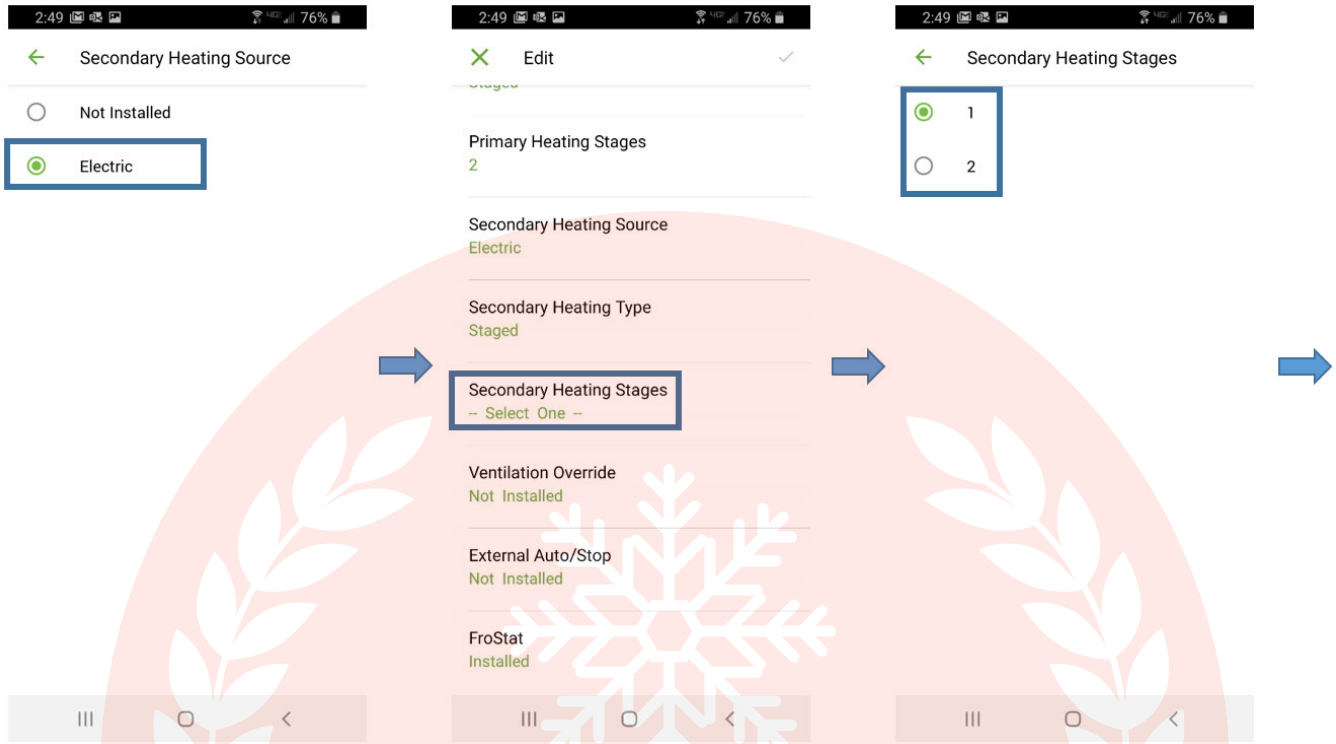

AIRE Y CLIMA ESPECIALIZADO

Figure 35. Apply changes

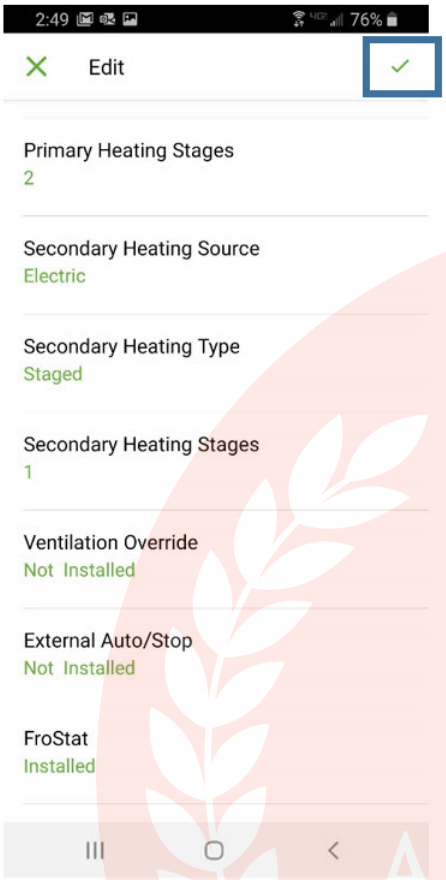

Figure 36. Verify changes

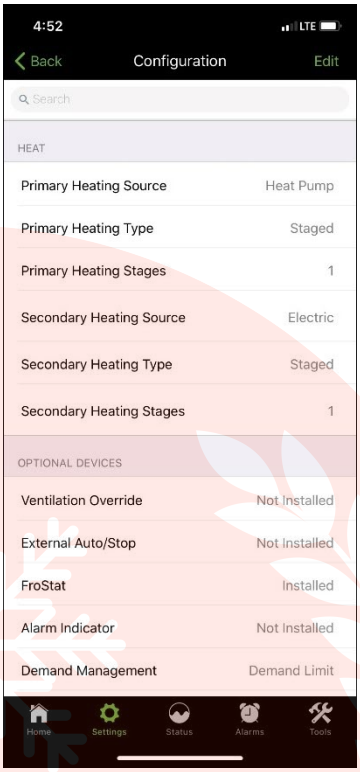

AIRE Y CLIMA ESPECIALIZADO

Maintenance

Perform all of the indicated maintenance procedures at the intervals scheduled. This will prolong the life of the unit and reduce the possibility of costly equipment failure.

Fan Belt Adjustment

⚠ WARNING

Rotating Components!

Failure to disconnect power before servicing could result in rotating components cutting and slashing technician which could result in death or serious injury.

Disconnect all electric power, including remote disconnects before servicing. Follow proper lockout/tagout procedures to ensure the power can not be inadvertently energized.

The fan belts must be inspected periodically to assure proper unit operation. Replacement is necessary if the belts appear frayed or worn.

When removing or installing the new belts, do not stretch them over the sheaves. Loosen the belts using the belt tension adjustment bolts on the motor mounting base.

Once the new belts are installed, using a Browning or Gates tension gauge (or equivalent), adjust the belt tension as follows:

1. To determine the appropriate belt deflection:
   a. Measure the center-to-center shaft distance (in inches) between the fan and motor sheaves.
   b. Divide the distance measured in Step 1a by 64; the resulting value represents the amount of belt deflection that corresponds to the proper belt tension.
2. Set the large O-ring on the belt tension gauge at the deflection value determined in Step 1b.
3. Set the small O-ring at zero on the force scale of the gauge plunger.
4. Place the large end of the gauge at the center of the belt span; then depress the gauge plunger until the large O-ring is even with the top of the next belt or even with a straightedge placed across the fan and motor sheaves.
5. Remove the belt tension gauge. The small O-ring now indicates a number other than zero on the plunger's force scale. This number represents the force (in pounds) required to give the needed deflection.
6. Compare the "force" scale reading (Step 5) with the appropriate "force" value listed in the Belt tension table. If the "force" reading is outside the range, readjust the belt tension.

   Note: *Actual belt deflection "force" must not exceed the maximum "force" value shown in Figure 37, p. 43.*

   Recheck the belt tension at least twice during the first 2 to 3 days of operation. Belt tension may decrease until the new belts are "run in".

Figure 37. Belt tension gauge

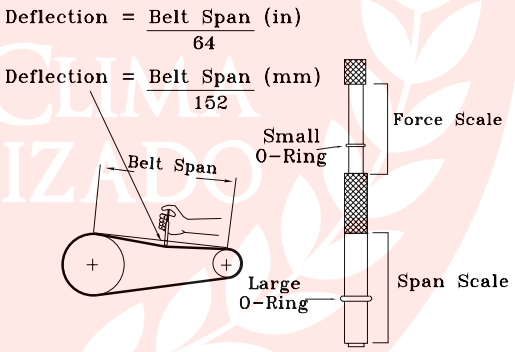

Table 9. Belt tension measurement and deflection

Belts Cross Section	Small Pitch Diameter Range	Deflection Force (Lbs)			
		Standard V-Belt		V-Belt with Molded Notches	
		Min.	Max.	Min.	Max.
A	3.0 - 3.6	3	4-1/2	3-7/8	5-1/2
	3.8 - 4.8	3-1/2	5	4-1/2	6-1/4
	5.0 - 7.0	4	5-1/2	5	6-7/8
B	3.4 - 4.2	4	5-1/2	5-3/4	8
	4.4 - 5.6	5-1/8	7-1/8	6-1/2	9-1/8
	5.8 - 8.8	6-3/8	8-3/4	7-3/8	10-1/8

Monthly

The following warning complies with State of California law, Proposition 65.

⚠ WARNING

Hazardous Voltage w/Capacitors!

Failure to disconnect power and discharge capacitors before servicing could result in death or serious injury.

Disconnect all electric power, including remote disconnects and discharge all motor start/run capacitors before servicing. Follow proper lockout/tagout procedures to ensure the power cannot be inadvertently energized. For variable frequency drives or other energy storing components provided by Trane or others, refer to the appropriate manufacturer's literature for allowable waiting periods for discharge of capacitors. Verify with a CAT III or IV voltmeter rated per NFPA 70E that all capacitors have discharged.

NOTICE

Operating Under Vacuum!

Failure to follow these instructions will result in compressor failure.

Do not operate or apply power to the compressor while under a vacuum.

⚠ WARNING

Fiberglass Wool!

Exposure to glass wool fibers without all necessary PPE equipment could result in cancer, respiratory, skin or eye irritation, which could result in death or serious injury. Disturbing the insulation in this product during installation, maintenance or repair will expose you to airborne particles of glass wool fibers and ceramic fibers known to the state of California to cause cancer through inhalation.

You MUST wear all necessary Personal Protective Equipment (PPE) including gloves, eye protection, a NIOSH approved dust/mist respirator, long sleeves and pants when working with products containing fiberglass wool.

Precautionary Measures:

- **Avoid breathing fiberglass dust.**
- **Use a NIOSH approved dust/mist respirator.**
- **Avoid contact with the skin or eyes. Wear long-sleeved, loose-fitting clothing, gloves, and eye protection.**
- **Wash clothes separately from other clothing; rinse washer thoroughly.**
- **Operations such as sawing, blowing, tear-out, and spraying may generate fiber concentrations requiring additional respiratory protection. Use the appropriate NIOSH approved respirator.**

First Aid Measures:

- **Eye Contact - Flush eyes with water to remove dust. If symptoms persist, seek medical attention.**
- **Skin Contact - Wash affected areas gently with soap and warm water after handling.**

Conduct the following maintenance inspections once per month:

- ☐ Inspect air filters and clean (or replace) if necessary.
- ☐ Check unit wiring to ensure all connections are tight and that the wiring insulation is intact.
- ☐ Check drain pans and condensate piping to insure they are free of obstacles.
- ☐ Manually rotate the indoor fan to ensure proper operation.
- ☐ Inspect the evaporator coils for dirt and debris. If the coils appear dirty, clean them.
- ☐ Observe indoor fan operation and correct any unusual or excessive vibration. Clean blower wheels as needed.

AIRE Y CLIMA ESPECIALIZADO

Annually (Cooling Season)

The following maintenance procedures must be performed at the beginning of each cooling season to ensure efficient unit operation:

- ☐ Perform all of the monthly maintenance inspections.
- ☐ With the unit operating, check unit superheat and record the reading in the "Maintenance Log," p. 46.
- ☐ Remove any accumulation of dust and/or dirt from the unit casing.
- ☐ Remove corrosion from any surface and repaint. Check the gasket around the control panel door to ensure it fits correctly and is in good condition to prevent water leakage.
- ☐ Inspect the evaporator fan belt. If it is worn or frayed, replace it.
- ☐ Inspect the control panel wiring to ensure that all connections are tight and that the insulation is intact.
- ☐ Check refrigerant piping and fittings for leaks.
- ☐ Inspect the evaporator coils for dirt and debris. If the coils appear dirty, clean them.

Coil Cleaning

Regular coil maintenance, including annual cleaning-enhances the unit's operating efficiency by minimizing:

- compressor head pressure and amperage draw
- water carryover
- fan brake horsepower
- static pressure losses

At least once each year — or more often if the unit is located in a "dirty" environment — clean the coil using the instructions outlined below. Be sure to follow these instructions as closely as possible to avoid damaging the coils.

AIRE Y CLIMA ESPECIALIZADO

Maintenance Log

Date	Ambient Temp. (°F)	Evaporator Entering Air		Compressor				Superheat (°F) (at compressor)		Subcooling (°F) (at liquid line)	
		Dry Bulb	Wet Bulb	Suction Pressure		Discharge Pressure		Circuit #1	Circuit #2	Circuit #1	Circuit #2
				(C1)	(C2)	(C1)	(C2)				

Note: *Perform each inspection once per month (during cooling season) while unit is operating.*

Wiring Diagram Matrix and Device Location

Table 10. Wiring schematics and device location

Part Number	Description	Applicability
Wiring Schematics		
1213–4233	Schematics; TWE - SZVAV/2-Speed Fan	All TWE Units with Digit 15 = "D"
1213–4234	Schematics; TWE - Constant Volume (3-Phase)	All TWE Units with Digit 8 = 3, 4, W, D, K "AND" Digit 15 = "1"
1213–4235	Schematics; TWE - 2 Speed Fan	All TWE Units with Digit 15 = "C"
1213–3272	Schematics; TWE - Constant Volume (1-Phase)	All TWE Units with Digit 8 = 1
Device Location		
1213–3587	Device Location; TWE - SZVAV/2-Speed Fan with Symbio Condenser	All TWE Units with Digit 15 = "D"
1213–3585	Device Location; TWE - Constant Volume	All TWE Units with Digit 15 = "1"
1213–3586	Device Location; TWE - 2 Speed Fan with Electro mechanical Condenser	All TWE Units with Digit 15 = "C"

AIRE Y CLIMA
ESPECIALIZADO

Warranty

Central Air Conditioner

This warranty is extended by Trane to the original purchaser and to any succeeding owner of the real property to which the Air Conditioner is originally affixed, and applies to products purchased and retained for use within the U.S.A. and Canada. There is no warranty against corrosion, erosion or deterioration.

Warrantor warrants for a period of 12 months from initial start-up or 18 months from date of shipment, whichever is less, that the products covered by this warranty (1) are free from defects in material and manufacture, and (2) have the capacities and ratings set forth in catalogs and bulletins; provided, that no warranty is made against corrosion, erosion or deterioration. Warrantor's obligations and liabilities under this warranty are limited to furnishing, F.O.B. factory replacement parts (or equipment at the option of Warrantor) for all Warrantor's products not conforming to this warranty. Warrantor shall not be obligated to pay for the cost of lost refrigerant. No liability whatever shall attach to Warrantor until said products have been paid for and then said liability shall be limited to the purchase price of the equipment shown to be defective.

THE WARRANTY AND LIABILITY SET FORTH HEREIN ARE IN LIEU OF ALL OTHER WARRANTIES AND LIABILITIES, WHETHER IN CONTRACT OR IN NEGLIGENCE, EXPRESS OR IMPLIED, IN LAW OR IN FACT, INCLUDING IMPLIED WARRANTIES OF MERCHANTABILITY AND FITNESS FOR PARTICULAR USE, AND IN NO EVENT SHALL WARRANTOR BE LIABLE FOR ANY INCIDENTAL OR CONSEQUENTIAL DAMAGES.

Some states do not allow limitations on how long an implied warranty lasts or do not allow the exclusion or limitation of incidental or consequential damages, so the above limitation or exclusion may not apply to you. This warranty gives you specific legal rights, and you may also have other rights which vary from state to state.

Trane, 2701 Wilma Rudolph Blvd., Clarksville, TN 37040- 1008 Attention: Manager, Product Service TW-338-0597

*This warranty is for commercial usage of said equipment and not applicable when the equipment is used for a residential application. Commercial use is any application where the end purchaser uses the product for other than personal, family or household purposes.

AIRE Y CLIMA
ESPECIALIZADO

AIRE Y CLIMA
ESPECIALIZADO

AIRE Y CLIMA
ESPECIALIZADO

AIRE Y CLIMA
ESPECIALIZADO

AIRE Y CLIMA
ESPECIALIZADO

Trane and American Standard create comfortable, energy efficient indoor environments for commercial and residential applications. For more information, please visit trane. com or americanstandardair.com.

Trane and American Standard have a policy of continuous product and product data improvement and reserve the right to change design and specifications without notice. We are committed to using environmentally conscious print practices.

SSA-SVX06M-EN 05 Mar 2022
Supersedes SSA-SVX06L-EN (September 2021)

©2022