Product Catalog

Split System Air Conditioners Odyssey™ with Symbio™ Controls

Heat Pump Condenser, 6 to 20 Tons, 60 Hz
Air Handler, 5 to 20 Tons, 60 Hz

June 2022

SSP-PRC023T-EN

Introduction

Odyssey™ Split Systems offer a wide range of options, allowing you to easily match unit tonnage with the right load requirements.

When a project calls for the convenience and cost efficiency of a unitary product, where a rooftop unit isn't right, Odyssey may be the answer. It provides heating and cooling in a split configuration that's unique in its versatility while staying true to our standards for efficiency and reliability. And with the Symbio® digital controller on board, Odyssey introduces smart building capabilities that take service, comfort and sustainability beyond the expected.

With wide network availability, flexible applications, installation ease, built-in reliability and easy servicing, Odyssey will meet any number of customer applications. Add to that Trane's outstanding customer service and you have the formula to make Odyssey the clear choice for continued customer satisfaction.

Wide Network Availability

A broad distribution network provides owners, maintenance personnel, contractors, etc., the means to get their hands on equipment when they need it. Whether it's an emergency replacement or a new construction project in its infancy stages, Odyssey products meet an array of needs at the right time and right price.

Flexible Applications

No matter what the application, Odyssey provides the solution. A broad array of models and tonnages are available with single or dual compressors, single or dual circuits and numerous accessories. Condensing units can be installed on the ground or on a rooftop along with extended piping runs, while air handlers can be free discharge on the ground or horizontally suspended with long duct runs from a ceiling. Should application challenges arise, Odyssey delivers.

©2022 Trane

Easy to Install

Small footprints and low weights combined with factory installed components like TXVs, filter driers, etc., reduce installation time and cost. Colored connectors and wiring, as well as factory-tested units make Odyssey the right choice.

Built-in Reliability

Keeping in mind that productivity only occurs when equipment is operational,Trane has taken the steps to ensure that Odyssey is up and running. Early indicators such as phase/reversal monitors and loss of charge protection provide diagnostics which prevent failure and provide years of worry-free service and operation.

Easy to Service

When preventive maintenance or service is required, technicians will find efficient access to both air handlers and condensers. Panels provide complete, easy access coupled with standardized cabinets in which all components are located in proximity. Odyssey's improved design results in minimum service times and costs.

With these capabilities, Odyssey provides customers high efficiency and superior performance for the best all-around value in the market today.

Copyright

This document and the information in it are the property of Trane, and may not be used or reproduced in whole or in part without written permission. Trane reserves the right to revise this publication at any time, and to make changes to its content without obligation to notify any person of such revision or change.

Trademarks

All trademarks referenced in this document are the trademarks of their respective owners.

Revision History

- Updated Coil Guard information in Features, Accessories, Model Number Description and Mechanical Specifications chapters.
- General Data, Performance Data and Electrical Data chapters are updated.
- Capacity curves added in Performance Data chapter.
- Symbio™ jobsite connections are updated with new note and Warning.
- Hail Guard information is updated in Dimensional Data chapter.
- Minor edits.

AIRE Y CLIMA ESPECIALIZADO

Table of Contents

Features 6
- Split System Overview 6
- Standard and Optional Features 7
- Standard Controls 10
- Additional Controls 11

Accessories 12
- Heat Pump Condenser 12
- Air Handler 13
- Electric Heaters 14

Application Considerations 16
- Clearance Requirements 16
- 180° Blower Rotation 16
- Low Ambient Cooling 16

Selection Procedure 18
- Cooling Capacity 18
- Heating Capacity 18
- Air Delivery 19

Model Number Description 20
- Heat Pump Condenser 20
- Air Handler 21

General Data 22

Performance Data 27
- Gross Cooling Capacities 27
- Gross Heating Capacities 43
- Fan Performance 47

Zone Controls 65
- Zone Sensors 65
- Conventional Thermostats 65

Electrical Data 66
- Heat Pump Condenser 66
- Air Handler 67

Jobsite Connections 75
- Symbio™ Controls 75

AIRE Y CLIMA ESPECIALIZADO

Dimensional Data 77
Heat Pump 77
Air Handler 82
Accessories 90
Weights 97
Heat Pump Condenser 97
Air Handler 98
Mechanical Specifications 101
Condensing Units 101
Air Handlers 103

AIRE Y CLIMA
ESPECIALIZADO

Features

Split System Overview

Unlike typical split systems on the market, Odyssey offers easy servicing, built-in reliability, ease of installation and outstanding customer service. And because today's owners are very cost-conscious when it comes to service and maintenance, the Odyssey Split System was designed with direct input from service contractors. This valuable information helped to design a product that would get the service person off the job quicker and save the owner money.

Flexible Applications

Odyssey offers outstanding standard features enhanced by a variety of factory and field installed options, multiple control options, rigorously tested proven designs and superior product and technical support. Because of this, Odyssey offers ultimate flexibility. Units are built to order in our standard "shortest in the industry" ship cycle time. Odyssey is available with single, dual and manifolded compressor options. Single compressor outdoor units feature a single refrigeration circuitry, lowering job installation costs by requiring only one set of refrigerant lines.

Equally important, Odyssey offers single refrigerant circuit/capacity unloading models. The unloading units feature dual manifolded scroll compressors with two stages of capacity modulation and a single refrigeration circuit. Dual compressor/dual circuit models give true stand-by protection - if one compressor fails, the second will automatically start-up. Also, the first compressor can be serviced without shutting down the unit since the refrigerant circuits are independent. Dual compressor models also save on energy costs. During light load conditions, only one compressor will operate to save energy.

Factory installed VFD is standard with most units. These 2–Speed and Single Zone VAV (SZVAV) solutions, combined with condensing units that have multiple compressors, provide increased part load performance (IEER) when conditions are not at the max design condition. Additionally, some states have adopted codes that require this type of performance. Odyssey units are built with installation in mind. With a smaller footprint, the outdoor unit takes up less space and weighs less, making its installation more efficient and economical. Our indoor air handlers are built to be installed in confined spaces, fitting through standard doorways and freight elevators.

Unmatched Product Support

One of our finest assets, Trane Sales Representatives are a support group that can assist you with:

- Product
- Application
- Service
- Training
- Special Applications
- Specifications
- Computer Programs and much more

Rigorous Testing

Our units are rigorously rain tested to ensure water integrity. Actual shipping tests are performed to determine packaging requirements. Units are test shipped around the country to determine the best packaging. Factory shake and drop tests are used as part of the package design process to help assure that the unit arrives at the job site in top condition. Rigging tests include lifting a unit into the air and letting it drop one foot, assuring that the lifting lugs and rails hold up under stress. A 100% coil leak test is performed at the factory. The condenser coils are leak tested at 660 psig and evaporators to 450 psig. All parts are inspected at the point of final assembly. Sub-standard parts are identified and rejected immediately. Every unit receives a 100% unit run test before leaving the production line to ensure it lives up to rigorous Trane requirements.

AIRE Y CLIMA ESPECIALIZADO

Standard and Optional Features

Figure 1. Compressors

Figure 2. Belt drive motor

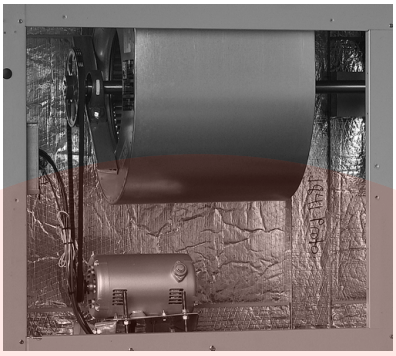

Airflow Distribution — Odyssey can replace an older machine with old ductwork and, in many cases, improve the comfort through better air distribution.

Anti-Short Cycle Timing — The Symbio™ 700 controller provides a 3 minute minimum “ON” time and 3 minute “OFF” time for compressors to enhance compressor reliability by assuring proper oil return.

Belt Drive Motors — For additional static requirements, Odyssey Split Systems offer standard belt drive motors to meet and exceed a wide range of airflow needs.

Black Epoxy Pre-Coated Condenser Coils — The pre-coated coils are an economical option for protection in mildly corrosive environments.

Coil Guards — Coil Guards are standard with all condensers. This feature protects the condenser coil from vandalism and/or hail damage. When ordered factory installed, it also adds additional shipping protection.

Colored Connectors and Wiring — Interconnecting wiring between components is standardized using colored and keyed connectors and colored wires, helping to save time and money tracing wires and diagnosing the unit.

Compressors — Odyssey Split Systems contain the best compressor technology available to achieve the highest possible performance. Dual compressors perform very well under part load cooling conditions and system back- up applications. Dual compressors are available on 6-20 ton models and allow for efficient cooling utilizing 2-stages of compressor operation.

Convertible Units — The air handlers ship in a horizontal configuration. They can be easily converted to vertical by simply repositioning the drain pan.

Crankcase Heaters — These band heaters provide improved compressor reliability by warming the oil to prevent migration during off-cycles or low ambient conditions.

Dual Sloped Drain Pans— Every Odyssey unit has a non-corrosive, removable, double sloped drain pan that’s easy to clean and reversible to allow installation of drain trap in two positions on either side of the unit.

Duct flanges — An optional field installed kit that can save time and money.

Easy Access Low Voltage Connections — Thermostat and other low voltage control wiring connections are made directly to the Symbio 700 and other boards in the system. Screw-type pressure connectors are detachable from the boards for easy connection of control wires – saving cost and time.

Electric Heaters — Electric heat modules are available in a variety of voltages and capacities.

Foil Faced Insulation — All internal air handler surfaces have cleanable foil-faced insulation. All edges are either captured or sealed to ensure insulation fibers do not get into the airstream.

Heat Pump Fan Fail Consideration — For SZVAV/2–Speed units: In the event that airflow is not available during heating operation, a bi-metallic switch is mounted on the VFD bracket to turn off the compressors and prevent overheating of the motor and VFD.

High Static Motor — This high static motor accessory extends the capability of the standard unit.

High and Low Voltage Control Panel — High voltage components and connections are isolated from low voltage and covered with a sheet metal panel. This allows setup and test parameters at the Symbio™ 700 display and the VFD keypad display to be safely viewed and adjusted in the low voltage section of the control panel.

High Pressure Control — All units include High Pressure Control as standard.

Low Ambient Cooling — All Odyssey units have cooling capabilities down to 0°F as standard. At temperatures below 50°F, some reduction in cooling capacity can be expected. When the optional Low Ambient Accessory kit is field installed, the full capacity of the unit is available down to 0°F.

Low Voltage Connections — Low voltage wiring connects directly to the control boards in the unit via detachable connectors. This makes it easy for the installer to attach the wires and then snap the connectors into place.

Phase Monitor/Reversal Protection — Phase monitor shall provide 100% protection for motors and compressors against problems caused by phase loss, phase imbalance, and phase reversal. Phase monitors are equipped with an LED that provides an ON or FAULT indicator.

ID Fan Fail — The Symbio™ 700 controller provides a ID fan fail feature caused by belt failure and motor freewheeling under no load. The Variable Frequency Drive records the motor torque and if below a certain value shuts the unit. Fan Fail error is displayed on controller display.

Quick-Access Panels — Remove a few screws for access to the standardized internal components and wiring.

Single Point Power — A single electrical connection powers the unit.

Single Side Service — Single side service is standard on all units.

Single Zone Variable Air Volume (SZVAV) — A variable frequency drive is used in conjunction with the Symbio™ 700 to provide supply fan motor speed modulation. For SZVAV control, the drive will accelerate or decelerate as required to meet the Zone Cooling demand. In order to maximize energy savings, the VFD will be held at minimum speed until the load in the zone requires the speed to increase. The supply fan speed will be reduced to a minimum of 58%[1] during ventilation and part load cooling demands, and 80% during full load cooling demands with the ability to fully modulate. The commissioning maximum and minimum airflow points can be easily set by programming these parameters at the display on the Symbio control board.

Standardized Components — Components are placed in the same location on all Odyssey units. Because of these standardized components throughout the Odyssey line, contractors/owners can stock fewer parts.

Symbio™ 700 — Standard on Odyssey condensers, the Symbio™ 700 controller provides exceptional machine control with a focus on system reliability and application flexibility. The Symbio controller provides direct access to the Symbio Service and Installation mobile application for easy setup and troubleshooting with no special tools. A wide range of system integration options (Non-communicating, BACnet®, LonTalk®, etc.) provide options to meet the needs of your application.

Thermal Expansion Valve with Bypass Check Valves — This feature is standard on all indoor units.

Unit Cabinet — The compact cabinet takes up less room and is less costly to ship. The design also ensures water integrity.

AIRE Y CLIMA ESPECIALIZADO

1. *64% for part load and 83% for full load if a max speed of less than 44.5 Hz is desired.*

Table 1. Odyssey features – standard and optional

	Standard Features	Options[a]	
		Factory Installed	Field Installed
1-year Limited Parts Warranty	X		
5-year Limited Compressor Warranty	X		
Belt Drive Motors	X		
Black Epoxy Pre-Coated Coils		X	
Coil Guards	X		
Colored Connectors and Wiring	X		
Compressor Discharge Temperature Limit (DTL)	X		
Convertible Airflow	X		
Crankcase Heaters	X		
Easy Access Low Voltage Connections	X		
Electric Heaters			X
Filters	X		
Filters – 2” MERV 13			X
Foil-Faced and Edge Captured Insulation	X		
High Pressure Control	X		
High Static Motor Kit[b]			X
IAQ Dual Sloped and Removable Drain Pans	X		
Low Ambient Cooling			X
Liquid Line Refrigerant Drier	X		
Low Pressure Control	X		
Low Static Motor Kit[b]			X
Low Voltage Circuit Protection	X		
Phase Loss/Reversal Monitor	X		
Quick Access Panels	X		
Scroll Compressors	X		
Single Point Power	X		
Single Side Service	X		
Single Zone Variable Air Volume (SZVAV / 2–Speed Fan)		X	
Standardized Components	X		
Symbio™ Controls	X		
Thermal Expansion Valve	X		
Vibration Isolators			X

[a] Refer to model number description for option availability or contact Product Support.
[b] Available on constant volume units only. See Accessories chapter for more information.

AIRE Y CLIMA ESPECIALIZADO

Standard Controls

Symbio™ 700 Controls

Figure 3. Symbio 700 board

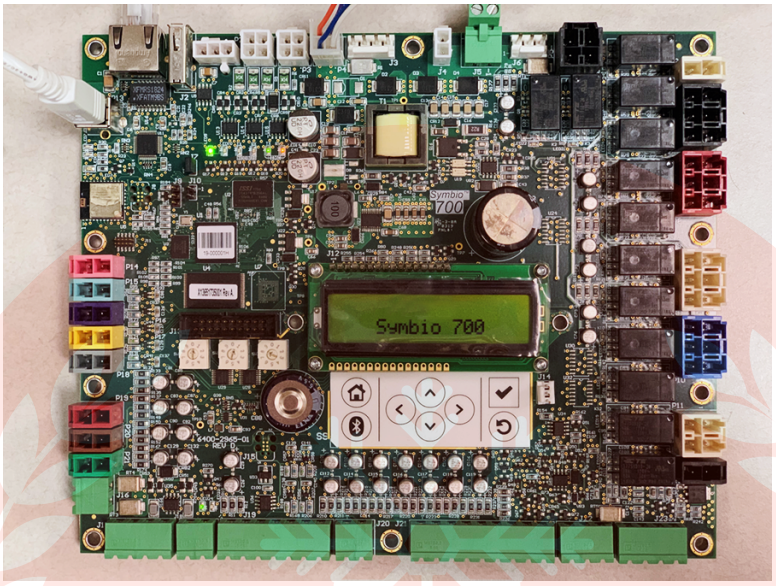

Symbio 700 controls provide unit control for heating, cooling, and ventilating, utilizing input from sensors that measure outdoor and indoor temperature. Symbio also provides outputs for building automation systems and expanded diagnostics. Quality and reliability are enhanced through Symbio control and logic:

- Prevents the unit from short cycling, considerably improving compressor life.
- Ensures the compressor will run for a specific amount of time which allows oil to return for better lubrication, enhancing the reliability of the compressor.
- Reduces the number of components required to operate the unit, reducing possibilities for component failure.

Installation and Service

The Symbio™ 700 control platform provides a user-friendly, onboard interface that makes setup and continued operation easy – or users can take advantage of the Symbio™ Service and Installation Mobile App for setup, troubleshooting, and operation. Both the Symbio onboard user interface and mobile app simplify troubleshooting by displaying active alarms. Symbio eliminates the need for field-installed, anti-short cycle timer and time delay relays. The wiring of the low voltage connections to the unit and zone sensors is simple, making installation easy.

Testing

Symbio™ 700 requires no special tools to run the unit through its paces. Simply navigate to the ‘Service’ section of the user interface or the ‘Utilities’ section of the Symbio™ Service and Installation Mobile App and enter the test section. Here the unit can be placed in the desired operating condition for a pre-determined amount of time supporting troubleshooting efforts in the field. The Symbio 700 will return to normal control when the user exits test mode or when the pre-determined, user-selected Service Test time has expired.

Other Benefits

- Symbio™ 700 built-in anti-shortcycle timer, time delay relay and minimum “on” time control functions are factory tested to assure proper operation.
- Symbio 700 softens electrical “spikes” by staging on fans, compressors and heaters.
- Intelligent Fallback is a benefit to the building occupant. If a component goes astray, the unit will continue to operate at predetermined temperature setpoint.

- Intelligent Anticipation is a standard feature. It functions continuously as Symbio 700 and zone sensor(s) work together in harmony to provide much tighter comfort control than conventional electromechanical thermostats.
- The Symbio 700 design is standardized across the board, ensuring a lower cost to owners.

Additional Controls

VariTrac® Building Automation System — When Trane's changeover VAV System for light commercial applications is coupled with the unit, it provides the latest in technological advances for comfort management systems and can allow thermostat control in every zone served by VariTrac.

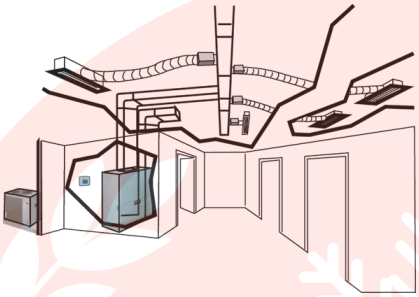

Frostat™ — This control (a standard feature on all air handlers) utilizes a capillary bulb embedded in the face of the evaporator coil which monitors coil temperature to inhibit evaporator icing and protect the compressor. Useful for applications with low leaving air temperatures, low airflow and/or high latent load applications.

LonTalk® Communications Interface — The LonTalk communications interface allows the unit to communicate as a Tracer LON® device or directly with generic LonTalk Network Building Automation System Controls.

BACnet® Communication Interface (BCI) — The BACnet Communication Interface allows the unit to communicate directly with a generic open protocol BACnet MS/TP or IP Network Building Automation Control System.

Zone Sensors/Thermostats— Available in programmable, automatic and manual styles.

Table 2. Odyssey control options – standard and optional

	Standard Features	Options[a]	
		Factory Installed	Field Installed
BACnet® Communication Interface (BCI)		X	
Froststat™ - Evaporator Defrost Control (EDC)	X		
LonTalk® Communications Interface (LCI)		X	X
Symbio™ 700 Microprocessor Controls	X		
Thermostat			X
Zone Sensor			X

[a] Refer to model number description for option availability or contact Product Support.

Accessories

Heat Pump Condenser

Table 3. TWA accessories

Model	Used With
Rubber Isolators	
BAYISLT005* (black)	TWA072, TWA090, TWA120
BAYISLT009* (red)	TWA180
BAYISLT010* (green)	TWA240
Steel Spring Isolators	
BAYISLT023* (red)	TWA072, TWA090, TWA120
BAYISLT024* (black)	TWA180
BAYISLT025* (yellow)	TWA240
Service Valve Kit	
BAYVALV001*	TWA0724*A, TWA1204*A
BAYVALV002*	TWA0904*A
BAYVALV003*	TWA0724*D, TWA0904*D, TWA1204*D
BAYVALV006*	TWA01804*D, TWA2404*D
Low Ambient — On/Off Fan Control[a] [b]	
BAYLOAMS10* (External Mount, small cabinets)[c]	(all voltages) TWA072, TWA090, TWA120
BAYLOAMS20* (Internal mount, large cabinets)	(all voltages) TWA180, TWA240
Transducer Kit for Head Pressure Control (BAYLOAMS10*)	
BAYLOTR001*[d]	TWA072**D, TWA090**D, TWA120**D
LonTalk Communications Interface[e]	
BAYLTCI005*	All Models
Expansion Module Kit	
BAYMODU002* (XM30)	All Models
BAYMODU004* (XM32)	All Models

(a) Cycles fan on/off (no modulating).
(b) When BAYLOAM is used, the Evaporator Defrost Control (EDC) must be disabled in the Symbio 700 controller configuration.
(c) Kit mounts external to the outdoor unit and operates by sensing ambient temperature and discharge pressure.
(d) BAYLOTR001* required when BAYLOAMS10* kits are used with units that have 2 compressors (dual circuit) and 1 condenser fan.
(e) Field installed LonTalk interface requires installation of Symbio control board with Advanced Diagnostics (not included).

AIRE Y CLIMA

Air Handler

Table 4. TWE Accessories

Model	Used With
Base (Subbase)	
BAYBASE009*	TWE060
BAYBASE0010*	TWE072, TWE090
BAYBASE0011*	TWE120
BAYBASE0012*	TWE180
BAYBASE0013*	TWE240
Drip Kit	
BAYDRKT006*	TWE060
BAYDRKT007*	TWE072, TWE090
BAYDRKT008*	TWE120
BAYDRKT009*	TWE180
BAYDRKT010*	TWE240
Duct Flange Kit	
BAYDUCT010*	TWE051, TWE060, TWE072, TWE076, TWE090, TWE101, TWE120
BAYDUCT020*	TWE126, TWE156, TWE180, TWE201, TWE240, TWE251, TWE300
Filters – 2” MERV 13	
BAYFILT001*	TWE060
BAYFILT002*	TWE072, TWE090
BAYFILT003*	TWE120
BAYFILT004*	TWE180
BAYFILT005*	TWE240
Rubber Isolators[a] [b] [c]	
BAYISLT004* (Floor — Blue)	TWE060, TWE072, TWE090, TWE120
BAYISLT009* (Floor — Red)[d]	TWE180
BAYISLT010* (Floor — Green)	TWE240
BAYISLT012* (Suspended —Red/Green)	TWE180
BAYISLT013* (Suspended —Red/Green)	TWE060
BAYISLT014* (Suspended — Green)	TWE072, TWE090
BAYISLT015* (Suspended — Green/Black)	TWE120
BAYISLT016* (Suspended —Red/Green)	TWE240
Steel Spring Isolators	
BAYISLT019* (Floor — Red)	TWE060, TWE072, TWE090, TWE120
BAYISLT021* (Floor — Black)	TWE180
BAYISLT032* (Floor — Black/Yellow)	TWE240
BAYISLT028* (Suspended — Tan)	TWE060
BAYISLT029* (Suspended — Red)	TWE072, TWE090, TWE120
BAYISLT030* (Suspended — Black)	TWE180
BAYISLT031* (Suspended — Black/Yellow)	TWE240
Plenum[e]	
BAYPLNM015* (Discharge Plenum & Grille)	TWE060
BAYPLNM016* (Discharge Plenum & Grille)	TWE072, TWE090
BAYPLNM017* (Discharge Plenum & Grille)	TWE120
BAYPLNM018* (Discharge Plenum/Hydronic Coil Plenum & Grille)	TWE180
BAYPLNM019* (Discharge Plenum/Hydronic Coil Plenum & Grille)	TWE240
BAYPLNM020* (Hydronic Coil Discharge Plenum & Grille)	TWE060
BAYPLNM021* (Hydronic Coil Discharge Plenum & Grille)	TWE072, TWE090
BAYPLNM022* (Hydronic Coil Discharge Plenum & Grille)	TWE120
BAYPLNM030* (Electric Heat Discharge Plenum & Grille)	TWE060
BAYPLNM031* (Electric Heat Discharge Plenum & Grille)	TWE072, TWE090

AIRE Y CLIMA ESPECIALIZADO

Table 4. TWE Accessories (continued)

Model	Used With
BAYPLNM032* (Electric Heat Discharge Plenum & Grille)	TWE120
BAYPLNM033* (Electric Heat Discharge Plenum & Grille)	TWE180
BAYPLNM034* (Electric Heat Discharge Plenum & Grille)	TWE240
Return Air Grille	
BAYGRLE001*	TWE060
BAYGRLE002*	TWE072, TWE090
BAYGRLE003*	TWE120
BAYGRLE004*	TWE180
BAYGRLE005*	TWE240
Symbio™ Options Module Kit	
BAYMODU001*	All TWE units with Digit 15 = 1 and Electric heater installed
Transformer	
BAYTFMR018* - 100 VA Transfomer (208-230V)	All TWE072 – TWE300, 208-230V units
BAYTFMR019* - 100 VA Transfomer (460V)	All TWE072 – TWE120, 460V units
BAYTFMR020* - 100 VA Transfomer (575V)	All TWE072 – TWE120, 575V units
BAYTFMR021* - 100 VA Transformer (400 V)	All TWE072 – TWE120, 380V/60 Hz unit
Water Kits	
BAYWATR022* (Steam Coil Enclosure)	TWE060
BAYWATR023* (Steam Coil Enclosure)	TWE072, TWE090
BAYWATR024* (Steam Coil Enclosure)	TWE120
BAYWATR025* (Steam Coil Enclosure)	TWE180
BAYWATR026* (Steam Coil Enclosure)	TWE240
BAYWATR027* (Hot Water Coil Enclosure)	TWE060
BAYWATR028* (Hot Water Coil Enclosure)	TWE072, TWE090
BAYWATR029* (Hot Water Coil Enclosure)	TWE120
BAYWATR030* (Hot Water Coil Enclosure)	TWE180
BAYWATR031* (Hot Water Coil Enclosure)	TWE240
Wire Kit — 180° Blower Discharge Reversal Kit[f]	
BAYWRKT002*	TWE060, TWE072, TWE090, TWE120

(a) Requires use of subbase accessory.
(b) In units with steam or hot water coils applied vertically or horizontally, check IOM for proper Isolator Kit selection.
(c) Do not use if blower will operate less than 600 RPM.
(d) When the air handler is in the vertical position and close proximity trapping of condensate is required, use of subbase is required.
(e) When installed horizontally, plenum/water coil must be self-supported. When adding vibration isolators, see Isolator Installation Guide (ACC-SVN92*-EN) for isolator and location matrix.
(f) Cannot be used on TWE180-300, due to motor mount location.

Note: *See HUB case DOC-209462 for high-static and low-static drive kits (available only for constant volume air handlers).*

Electric Heaters

Table 5. Electric heaters

Model	Used With
6–10 Ton Electric Heater Selection	
BAYHTRN106* — 4.33/5.76 kW Heater 208/240/1 Phase	TWE060*1, TWE090*1, TWE120*1
BAYHTRR112* — 8.65/11.52 kW Heater 208/240/1 Phase	TWE060*1, TWE090*1, TWE120*1
BAYHTRS117* — 12.98/17.28 kW Heater 208/240/1 Phase	TWE060*1, TWE090*1, TWE120*1
BAYHTRR123* — 17.31/23.04 kW Heater 208/240/1 Phase	TWE060*1, TWE090*1, TWE120*1
BAYHTRN129* — 21.63/28.80 kW Heater 208/240/1 Phase	TWE090*1, TWE120*1
BAYHTRN305* — 3.76/5.00 kW Heater 208/240/3 Phase	TWE060*3 (CV & OS MTR), TWE072*3B, TWE090*3, TWE120*3 (VFD)
BAYHTRR310* — 7.48/9.96 kW Heater 208/240/3 Phase	TWE060*3 (CV & OS MTR), TWE072*3B, TWE090*3, TWE120*3 (VFD)
BAYHTRR315* — 11.24/14.96 kW Heater 208/240/3 Phase	TWE060*3 (CV & OS MTR), TWE072*3B, TWE090*3, TWE120*3 (VFD)

Table 5. Electric heaters (continued)

Model	Used With
BAYHTRN325* — 18.72/24.92 kW Heater 208/240/3 Phase	TWE060*3 (CV & OS MTR), TWE072*3B, TWE090*3, TWE120*3 (VFD)
BAYHTRN335* — 26.20/34.88 kW Heater 208/240/3 Phase	TWE090*3, TWE120*3 (VFD)
BAYHTRN405* — 5.00 kW Heater 460/3 Phase	TWE060*4 (CV & OS MTR), TWE072*4******C/D, TWE090*4******C/D, TWE120*4******C/D
BAYHTRR410* — 9.96 kW Heater 460/3 Phase	TWE060*4 (CV & OS MTR), TWE072*4******C/D, TWE090*4******C/D, TWE120*4******C/D
BAYHTRR415* — 14.96 kW Heater 460/3 Phase	TWE060*4 (CV & OS MTR), TWE072*4******C/D, TWE090*4******C/D, TWE120*4******C/D
BAYHTRN425* — 24.92 kW Heater 460/3 Phase	TWE060*4 (CV & OS MTR), TWE072*4******C/D, TWE090*4******C/D, TWE120*4******C/D
BAYHTRN435* — 34.88 kW Heater 460/3 Phase	TWE090*4******C/D, TWE120*4******C/D
BAYHTRNW05* — 5 kW Heater 575/3 Phase	TWE060*W (CV & OS MTR), TWE072*W, TWE090*W, TWE120*W (VFD)
BAYHTRRW10* — 9.96 kW Heater 575/3 Phase	TWE060*W (CV & OS MTR), TWE072*W, TWE090*W, TWE120*W (VFD)
BAYHTRRW15* — 14.96 kW Heater 575/3 Phase	TWE060*W (CV & OS MTR), TWE072*W, TWE090*W, TWE120*W (VFD)
BAYHTRNW25* — 24.92 kW Heater 575/3 Phase	TWE060*W (CV & OS MTR), TWE072*W, TWE090*W, TWE120*W (VFD)
BAYHTRNW35* — 34.88 kW Heater 575/3 Phase	TWE090*W, TWE120*W (VFD)
15–20 Ton Electric Heater Selection	
BAYHTRP310* — 7.51/10.0 kW Heater 208/230 3 Phase	TWE180*3, TWE240*3 (VFD)
BAYHTRP320* — 14.96/19.92 kW Heater 208/230 3 Phase	TWE180*3, TWE240*3 (VFD)
BAYHTRP330* — 22.47/29.92 kW Heater 208/230 3 Phase	TWE180*3, TWE240*3 (VFD)
BAYHTRP350* — 37.44/49.84 kW Heater 208/230 3 Phase	TWE180*3, TWE240*3 (VFD)
BAYHTRP410* — 10.0 kW Heater 460/3 Phase	TWE180*4******C/D, TWE240*4 (VFD)
BAYHTRP420* — 19.92 kW Heater 460/3 Phase	TWE180*4******C/D, TWE240*4 (VFD)
BAYHTRP430* — 29.92 kW Heater 460/3 Phase	TWE180*4******C/D, TWE240*4 (VFD)
BAYHTRP450* — 49.84 kW Heater 460/3 Phase	TWE180*4******C/D, TWE240*4 (VFD)
BAYHTRPW10* — 10.0 kW Heater 575/3 Phase	TWE180*W, TWE240*W (VFD)
BAYHTRPW20* — 19.92 kW Heater 575/3 Phase	TWE180*W, TWE240*W (VFD)
BAYHTRPW30* — 29.92 kW Heater 575/3 Phase	TWE180*W, TWE240*W (VFD)
BAYHTRPW50* — 49.84 kW Heater 575/3 Phase	TWE180*W, TWE240*W (VFD)

Note: Electric Heaters not available for 380/60Hz.

AIRE Y CLIMA ESPECIALIZADO

Application Considerations

Application of this product should be within the cataloged airflow and performance considerations.

Clearance Requirements

The recommended clearances identified with unit dimensions should be maintained to assure adequate serviceability, maximum capacity and peak operating efficiency. Actual clearances which appear inadequate should be reviewed with the local representative.

180° Blower Rotation

The 5, 6, 7.5, and 10 ton standard air handler blower section can be rotated 180° to change the discharge pattern. This modification must be done in the field and requires an additional kit. See unit installation guide.

Low Ambient Cooling

As manufactured, all Odyssey units have cooling capabilities down to 0°F. At temperatures below 50°F, some reduction in cooling capacity can be expected. When the optional Low Ambient Accessory kit is field installed, the full capacity of the unit is available down to 0°F. When using these units with control systems such as bypass changeover Variable Air Volume, make sure to consider the requirement for a head pressure control to allow low ambient cooling.

Figure 4. Typical split system application

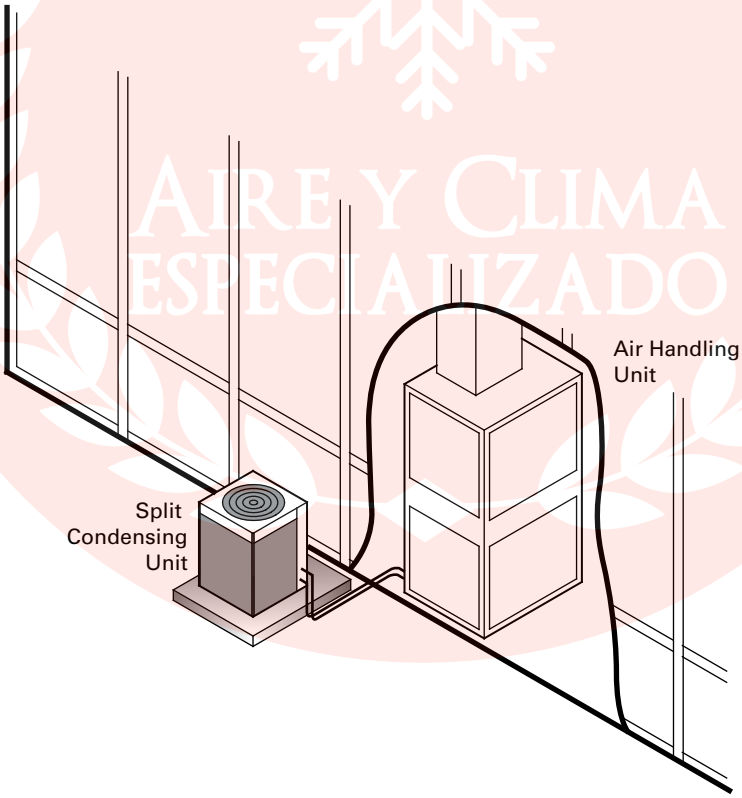

AIRE Y CLIMA
ESPECIALIZADO

Figure 5. Typical horizontal air handler application

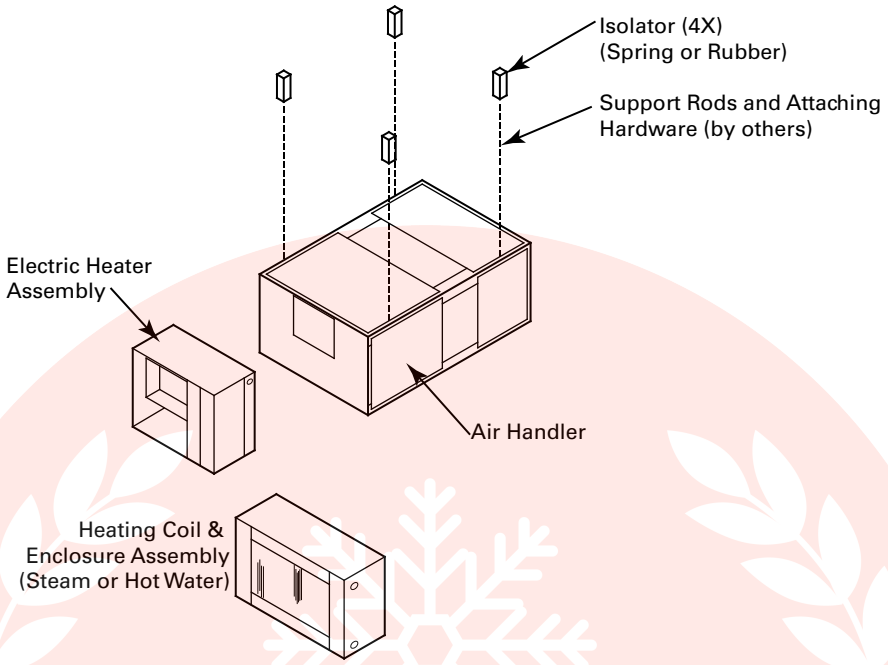

Figure 6. Typical vertical air handler application

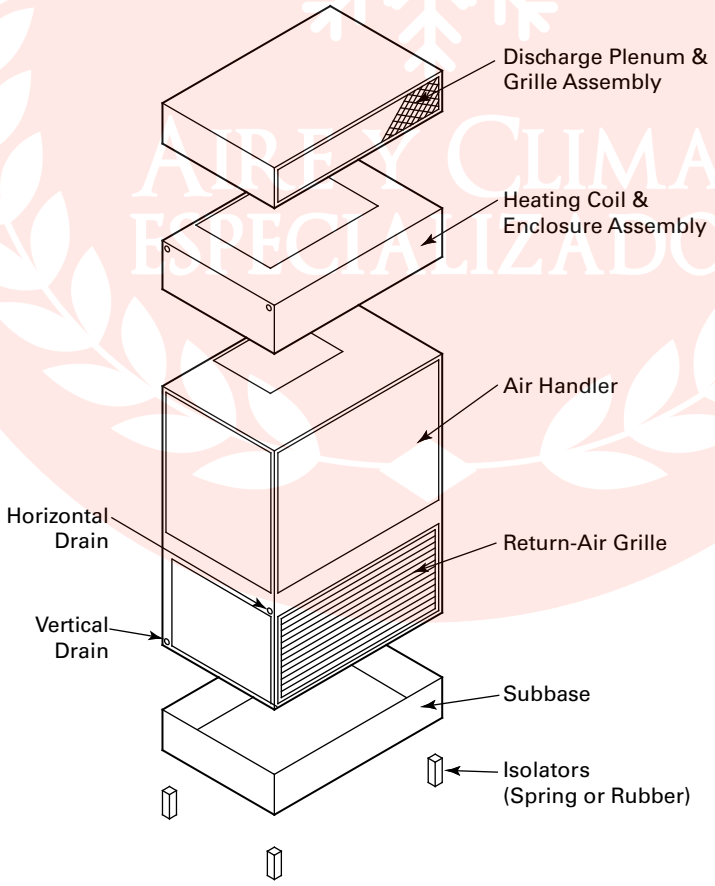

AIREY CLIMA
ESPECIALIZADO

Selection Procedure

Cooling Capacity

1. Calculate the building's total and sensible cooling loads at design conditions, using standardized calculation methods.
2. Size the equipment using the gross cooling capacity tables. Match the cooling loads at design conditions. For example, if the following specifies the building cooling requirements:

   Electrical Characteristics: 460/60/3
   Summer Design Conditions: Entering Evap Coil—80°F DB/67°F WB , Outdoor Ambient—95°F
   Total Cooling Load: 82 MBh
   Sensible Cooling Load: 60 MBh
   Airflow: 3000 cfm
   External Static Pressure: 0.77 inches of water gauge
3. Use to determine that TWA09043A with TWE09043A has a gross cooling capacity of 94.7 and 75.6 sensible capacity at 95°F DB ambient and 3000 cfm with 80°F DB/67° F WB air entering the evaporator.
4. To find the net cooling capacities, fan motor heat must be subtracted. Determine the total unit static pressure:

   External Static Duct System: 0.77
   Standard Filter: 0.10 in.
   Supplementary Electric Heat: 0.23 in.
   Total Static Pressure: 1.10 in.

   Notes:

   - *The Evaporator Fan Performance Table has included the effect of a 1 in. filter already. Therefore, the actual Total Static Pressure is 1.10 - 0.10 = 1.00 in. . With 3000 cfm and 1.00 in., Table 37, p. 49 shows 1.97 Bhp (high static drive kit required).*
   - *This formula can be used to calculate Fan Motor Heat:*

     3.15 X Bhp = MBh
     3.15 X 1.97 = 6.2 MBh
     Net Total Cooling Capacity = 94.7 MBh - 6.2 MBh = 93.2 MBh
     Net Sensible Cooling Capacity = 75.6 MBh - 6.2 MBh = 75.6 MBh

Heating Capacity

1. Calculate the building heating load using the Trane calculation form or any other standard accepted method.
2. Size the equipment using to match the heating loads at design conditions. For example, if the following specifies the building heating requirements:

   Total Heating Load: 95.0 MBh
   Outdoor Ambient (Winter): 17°F DB
   Indoor Return Temperature: 70°F DB
   Airflow: 2625 cfm
3. indicates the mechanical heating portion of the heat pump will provide 54.3 MBh for the winter design conditions. Full heat load must be carried by the supplementary heater in the unlikely event the heat pump malfunctions. From , the 34.88 kW heater at 460V has a capacity of 119,045. From , the 34.88 kW heater at 460V indicates the heater model is BAYHTRL435.

Air Delivery

1. The external static pressure drop through the air distribution system is 0.77 inches of water gauge, use to determine that the static pressure drop through the electric heater is 0.23 inches of water (0.77 + 0.23 = 1.00 in.).
2. Enter Table 37, p. 49 for TWE09043A at 2625 cfm and 1.00 static pressure. The high static motor at 995 RPM gives the desired airflow.

AIRE Y CLIMA ESPECIALIZADO

Model Number Description

Heat Pump Condenser

Digit 1, 2, 3— Unit Function

TWA = Split System Heat Pump

Digit 4, 5, 6 — Tonnage

072 = 6 Tons (60 Hz)
090 = 7.5 Tons (60 Hz)
120 = 10 Tons (60 Hz)
180 = 15 Tons (60 Hz)
240 = 20 Tons (60 Hz)

Digit 7 — Refrigerant

4 = R-410A

Digit 8 — Voltage

3 = 208-230 Vac - 3 PH (60Hz)
4 = 460 Vac - 3 PH (60Hz)
W = 575 Vac - 3 PH (60Hz)

Digit 9 — Refrigeration Circuit/Stage

A = 1 Compressor/1 Line/1 Stage (Single)
D = 2 Compressors/2 Line/2 Stage (Dual)

Digit 10 — Major Design Sequence

A = Rev A

Digit 11 — Minor Design Sequence

A = Rev A

Digit 12, 13 — Service Digits

**

Digit 14 — Efficiency Generation

B = Generation B

Digit 15 — Controls

S = Symbio™

Digit 16 — None

0 = None

Digit 17 — Coil Protection

1 = Standard Coil w/ Coil Guard
3 = Black Epoxy Pre-Coated Condenser Coil with Coil Guard (FIN/TUBE)

Digit 18, 19, 20 — None

0 = None

Digit 21 — Communications Options

0 = No Option
1 = Advanced Diagnostics and BACnet® BAS
2 = Advanced Diagnostics and LonTalk® Communications Interface (LCI)

Digit 22 to 40 — None

0 = None

AIRE Y CLIMA ESPECIALIZADO

Air Handler

Digit 1, 2, 3 — Unit Function

TWE = Air Handler

Digit 4, 5, 6— Tonnage

060 = 5 Tons (60 Hz)
072 = 6 Tons (60Hz)
090 = 7.5 Tons (60 Hz)
120 = 10 Tons (60 Hz)
180 = 15 Tons (60 Hz)
240 = 20 Tons (60 Hz)

Digit 7 — Refrigerant

4 = R-410A

Digit 8 — Voltage

1 = 208-230 Vac - 1 PH (60 Hz)
3 = 208-230 Vac - 3 PH (60 Hz)
4 = 460 Vac - 3 PH (60 Hz)
W = 575 Vac - 3 PH (60 Hz)

Digit 9 — Refrigeration Circuit/Stage

A = Single Circuit
B = Dual Circuit

Digit 10 — Major Design Sequence

A = Rev A

Digit 11 — Minor Design Sequence

A = Rev A

Digit 12, 13 — Service Digits

**

Digit 14 — Efficiency Generation

B = Generation B

Digit 15 — Controls

1 = Constant Volume
C = 2 Stage Airflow (Electromechanical Cond Only)
D = 2 Stage Airflow/Single Zone VAV (Symbio Cond Only)

Digit 16 — Indoor Fan Sizes

0 = Standard Motor
4 = High Static

Digit 17 to 40 — None

0 = None

AIRE Y CLIMA ESPECIALIZADO

General Data

Table 6. General data for 6 - 7.5 ton (TWA0724*A*-TWA0904*D*) heat pump units, 60 Hz

	6 Tons	6 Tons	7.5 Tons	7.5 Tons
	Single Comp TWA0724*A*	Dual Comp TWA0724*D*	Single Comp TWA0904*A*	Dual Comp TWA0904*D*
Cooling Performance - Gross Cooling Capacity				
Matched Air Handler	TWE0904*A*	TWE0724*B*	TWE0904*A*	TWE0904*B*
AHRI Rated Airflow	2,100	2,400	2,625	3,000
Gross Cooling Capacity - System	79,000	79,000	92,000	97,000
Condensing Unit Only	76,000	72,000	88,000	88,000
AHRI Net Cooling Capacity	78,000	77,000	90,000	94,000
Efficiency				
Matched Air Handler (EER)	11.3	11.2	11.0	11.2
Condensing Unit Only (EER)	12.7	12.7	11.0	12.8
System (IEER)	14.1	14.1	14.1	14.1
System kW/Condensing Unit kW	6.4 / 5.9	5.9 / 5.3	8.2 / 7.4	7.4 / 6.5
Heating Performance - AHRI Htg/Matched AH				
High Temperature Capacity	67,000	66,000	82,000	82,000
System kW/COP	5.60 / 3.4	5.00 / 3.4	6.70 / 3.4	6.20 / 3.4
Low Temperature Capacity	37,000	36,000	45,000	42,000
System kW/COP	4.90 / 2.25	4.70 / 2.25	5.90 / 2.25	5.80 / 2.25
Compressor				
Type	Scroll	Scroll	Scroll	Scroll
No./Tons	1/5.6	2/2.6	1/6.8	2/3.25
System Data				
No. Refrigerant Circuits[a]	1	2	1	2
Suction Line Connection (in.) OD[a]	1 3/8	7/8	1 3/8	1 1/8
Liquid Line Connection (in.) OD[a]	1/2	1/2	5/8	1/2
Outdoor Coil				
Type / Tube Size (in.) OD	Lanced / 0.375	Lanced / 0.375	Lanced / 0.375	Lanced / 0.375
Face Area (sq ft)	19.24	19.24	19.24	23.96
Rows/FPI (Fins per inch)	2/18	2/18	2/18	2/18
Outdoor Fan				
Type	Propeller	Propeller	Propeller	Propeller
No. Used/Diameter (in.)	1/26	1/26	1/26	1/26
Drive Type/No. Speeds	Direct/1	Direct/1	Direct/1	Direct/1
CFM	5,800	5,500	5,800	5,500
No. Motor/HP	1/0.5	1/0.5	1/0.5	1/0.5
Motor RPM	1,100	1,100	1,100	1,100
Refrigerant Charge (Field Supplied)				
lbs of R-410A	20.0	11.0/11.0	18.8	11.8/11.8
Shipping Dimensions				
HxWxD (in.)	45” x 45.25” x 39”	45” x 55” x 42”	45” x 45.25” x 39”	45” x 55” x 42”

[a] Refer to refrigerant piping applications manual for line sizing and line length.

AIRE Y CLIMA ESPECIALIZADO

Table 7. General data for 10 - 20 ton (TWA1204*A*-TWA2404*D*) heat pump units, 60 Hz

	10 Tons	10 Tons	15 Tons	20 Tons
	Single Comp TWA1204*A*	Dual Comp TWA1204*D*	Dual Comp TWA1804*D*	Dual Comp TWA2404*D*
Cooling Performance - Gross Cooling Capacity				
Matched Air Handler	TWE1204*A*	TWE1204*B*	TWE1804*B*	TWE2404*B*
AHRI Rated Airflow	4,000[a]	4,000	6,000	8,000
Gross Cooling Capacity - System	127,000	124,000	198,000	260,000
Condensing Unit Only	120,000	118,000	190,000	268,000
AHRI Net Cooling Capacity	123,000	120,000	192,000	250,000
Efficiency				
Matched Air Handler (EER)	11.3	11.2	10.8	10.0
Condensing Unit Only (EER)	12.5	12.6	11.9	12.5
System (IEER)	14.1	14.1	13.5	12.5
System kW/Condensing Unit kW	10.4 / 9.0	10.2 / 8.9	16.6 / 14.6	23.9 / 21.0
Heating Performance - AHRI Htg/Matched AH				
High Temperature Capacity	113,000[b]	109,000	185,000	229,000
System kW/COP	9.00 / 3.4	8.70 / 3.4	15.00 / 3.3	20.9 / 3.2
Low Temperature Capacity	66,000[c]	60,000	113,000	129,000
System kW/COP	8.2 / 2.25	7.90 / 2.25	13.60 / 2.05	17.90 / 2.05
Compressor				
Type	Scroll	Scroll	Scroll	Scroll
No./Tons	1/8.6	2/4.3	2/6.9	2/10.1
System Data				
No. Refrigerant Circuits[d]	1	2	2	2
Suction Line Connection (in.) OD[d]	1 3/8	1 1/8	1 1/8	1 3/8
Liquid Line Connection (in.) OD[d]	1/2	1/2	1/2	5/8
Outdoor Coil				
Type / Tube Size (in.) OD	Lanced / 0.375	Lanced / 0.375	Lanced / 0.375	Lanced / 0.375
Face Area (sq ft)	29.02	29.02	52.60	52.60
Rows/FPI (Fins per inch)	2/18	2/18	2/18	2/18
Outdoor Fan				
Type	Propeller	Propeller	Propeller	Propeller
No. Used/Diameter (in.)	1/28	1/28	2/28	2/28
Drive Type/No. Speeds	Direct/1	Direct/1	Direct/1	Direct/1
CFM	8,900	8,900	17,500	17,500
No. Motor/HP	1/1	1/1	2/1	2/1
Motor RPM	1,125	1,125	1,125	1,125
Refrigerant Charge (Field Supplied)				
lbs of R-410A	27.5	14.0/14.0	26.2/25.5	22.6/22.6
Shipping Dimensions				
HxWxD (in.)	52.1” x 55” x 42”	52.1” x 55” x 42”	51.1” x 96” x 48”	51.1” x 96” x 48”

(a) For single phase application, AHRI Rated Airflow will be 3,700.
(b) For single phase application, AHRI High Temperature Heating Capacity will be 112,000 BTU/hr.
(c) For single phase application, AHRI Low Temperature Heating Capacity will be 65,000 BTU/hr.
(d) Refer to refrigerant piping applications manual for line sizing and line length.

Table 8. General data - 6 -10 tons (TWE0724*B* - TWE1204*B*) SZVAV and 2-speed VFD air handler - 60Hz

	6 Tons	7.5 Tons	7.5 Tons	10 Tons	10 Tons
	Dual Circuit TWE07243B*, 4B*, WB*	**Single Circuit TWE09043A*, 4A*, WA***	**Dual Circuit TWE09043B*, 4B*, WB***	**Single Circuit TWE12043A*, 4A*, WA***	**Dual Circuit TWE12043B*, 4B*, WB***
System Data					
No. Refrigerant Circuits	2	1	2	1	2
Suction Line Connection (in.) OD	1-1/8	1-3/8	1-1/8	1-3/8	1-1/8
Liquid Line Connection (in.) OD	1/2	1/2	1/2	1/2	1/2
Indoor Coil					
Type	Lanced/Intertwined	Lanced/Intertwined	Lanced/Intertwined	Lanced/Intertwined	Lanced/Intertwined
Tube Size (in.)	0.375	0.375	0.375	0.375	0.375
Face Area (sq. ft.)	8.1	8.1	8.1	11.2	11.2
Rows/FPI (Fins per inch)	4/14	4/14	4/14	4/14	4/14
Refrigerant Control	Expansion Valve	Expansion Valve	Expansion Valve	Expansion Valve	Expansion Valve
Drain Connection Size (in.)	1 PVC	1 PVC	1 PVC	1 PVC	1 PVC
Indoor Fan					
Type	Centrifugal	Centrifugal	Centrifugal	Centrifugal	Centrifugal
No. Used/Diameter x Width (in.)	1/15x15	1/15x15	1/15x15	1/15x15	1/15x15
Drive Type/No. Speeds	Belt/VFD Variable	Belt/VFD Variable	Belt/VFD Variable	Belt/VFD Variable	Belt/VFD Variable
CFM (Nominal)	2400	2625	3000	4000	4000
No. Motors	1	1	1	1	1
Motor HP - Standard/Oversized	2.0/3.0	2.0/3.0	2.0/3.0	2.0/3.0	2.0/3.0
Motor RPM	1725	1725	1725	1725	1725
Motor Frame Size	56 H	56 H	56 H	56 H	56 H
Filters[a]					
Type/Furnished	Throwaway/Yes	Throwaway/Yes	Throwaway/Yes	Throwaway/Yes	Throwaway/Yes
(No.)/Size Recommended	(3) 16x25x1	(3) 16x25x1	(3) 16x25x1	(4) 16x25x1	(4) 16x25x1
MERV 13 (No.)/Size Recommended	(3) 16x25x2	(3) 16x25x2	(3) 16x25x2	(4) 16x25x2	(4) 16x25x2
Shipping Dimensions					
HxWxD (in.)	61.2" x 30.5" x 53"	61.2" x 30.5" x 53"	61.2" x 30.5" x 53"	61.2" x 30.5" x 69"	61.2" x 30.5" x 69"

[a] One inch, throw-away filters shall be standard on TWE060, TWE072, TWE090, TWE120 model air handlers from the factory. The filter rack can be field converted to two inch capability. Two inch, throw-away filters shall be standard on TWE180 and TWE240 models.

Table 9. General data - 15-20 tons (TWE1804*B* - TWE2404*B*) SZVAV and 2-speed VFD air handler - 60Hz

	15 Tons	20 Tons
	Dual Circuit TWE18043B*, 4B*, WB*	Dual Circuit TWE24043B*, 4B*, WB*
System Data		
No. Refrigerant Circuits	2	2
Suction Line Connection (in.) OD	1-3/8	1-3/8
Liquid Line Connection (in.) OD	1/2	5/8
Indoor Coil		
Type	Lanced/Intertwined	Lanced/Intertwined
Tube Size (in.)	0.375	0.375
Face Area (sq. ft.)	16.3	21.7
Rows/FPI (Fins per inch)	4/14	3/14
Refrigerant Control	Expansion Valve	Expansion Valve
Drain Connection Size (in.)	1 PVC	1 PVC
Indoor Fan		
Type	Centrifugal	Centrifugal
No. Used/Diameter x Width (in.)	2/15x15	2/15x15
Drive Type/No. Speeds	Belt/VFD Variable	Belt/VFD Variable
CFM (Nominal)	6000	8000
No. Motors	1	1
Motor HP - Standard/Oversized	3.0/5.0	5.0/7.5
Motor RPM	1725/3450	3450
Motor Frame Size	56 H	56 H/184 T
Filters[a]		
Type/Furnished	Throwaway/Yes	Throwaway/Yes
(No.)/Size Recommended	(8) 15x20x2	(4) 16x25x2 (4) 16x20x2
MERV 13 (No.)/Size Recommended	(8) 15x20x2	(4) 16x25x2 (4) 16x20x2
Shipping Dimensions		
HxWxD (in.)	76.3" x 33.3" x 85"	79.1" x 35.8" x 95"

[a] One inch, throw-away filters shall be standard on TWE060, TWE072, TWE090, TWE120 model air handlers from the factory. The filter rack can be field converted to two inch capability. Two inch, throw-away filters shall be standard on TWE180 and TWE240 models.

Table 10. 5–10 tons (TWE0604*A - TWE1204*B*) constant volume air handler - 60Hz

	5 Tons	5 Tons	7.5 Tons	7.5 Tons	10 Tons	10 Tons
	Single Circuit TWE06043A*, 4A*, WA*, 1A*	**Dual Circuit TWE06043B*, 4B*, 1B***	**Single Circuit TWE09041A***	**Dual Circuit TWE09041B***	**Single Circuit TWE12041A***	**Dual Circuit TWE12041B***
System Data						
No. Refrigerant Circuits	1	2	1	2	1	2
Suction Line Connection (in.) OD	1-1/8	1-1/8	1-3/8	1-1/8	1-3/8	1-1/8
Liquid Line Connection (in.) OD	1/2	1/2	1/2	1/2	1/2	1/2
Indoor Coil						
Type	Lanced/Intertwined	Lanced/Intertwined	Lanced/Intertwined	Lanced/Intertwined	Lanced/Intertwined	Lanced/Intertwined
Tube Size (in.)	0.375	0.375	0.375	0.375	0.375	0.375
Face Area (sq. ft.)	5	5	8.1	8.1	11.2	11.2
Rows/FPI (Fins per inch)	4/14	4/14	4/14	4/14	4/14	4/14
Refrigerant Control	Expansion Valve	Expansion Valve	Expansion Valve	Expansion Valve	Expansion Valve	Expansion Valve
Drain Connection Size (in.)	1 PVC	1 PVC	1 PVC	1 PVC	1 PVC	1 PVC
Indoor Fan						
Type	Centrifugal	Centrifugal	Centrifugal	Centrifugal	Centrifugal	Centrifugal
No. Used/Diameter x Width (in.)	1/12x12	1/12x12	1/15x15	1/15x15	1/15x15	1/15x15
Drive Type/No. Speeds	Belt/Adjustable	Belt/Adjustable	Belt/Adjustable	Belt/Adjustable	Belt/Adjustable	Belt/Adjustable
CFM (Nominal)	2000	2000	2625	3000	4000	4000
No. Motors	1	1	1	1	1	1
Motor HP - Standard/Oversized	0.75/1.5	0.75/1.5	1.5/2.0[a]	1.5/2.0[a]	2.0[b]	2.0[b]
Motor RPM	1725	1725	1725	1725	1725	1725
Motor Frame Size	56 H	56 H	56 H	56 H	56 H	56 H
Filters[c]						
Type/Furnished	Throwaway/Yes	Throwaway/Yes	Throwaway/Yes		Throwaway/Yes	Throwaway/Yes
(No.)/Size Recommended	(1) 16x20x1 (1) 20x20x1	(1) 16x20x1 (1) 20x20x1	(3) 16x25x1	(3) 16x25x1	(4) 16x25x1	(4) 16x25x1
MERV 13 (No.)/Size Recommended	(1) 16x20x2 (1) 20x20x2	(1) 16x20x2 (1) 20x20x2	(3) 16x25x2	(3) 16x25x2	(4) 16x25x2	(4) 16x25x2
Shipping Dimensions						
HxWxD (in.)	55.1" x 27.5" x 43.5"	55.1" x 27.5" x 43.5"	61.2" x 30.5" x 53"	61.2" x 30.5" x 53"	61.2" x 30.5" x 69"	61.2" x 30.5" x 69"

(a) 2hp oversized motor for 41A/B only.
(b) Standard motor only, 1204(1) does not have any oversize motor.
(c) One inch, throw-away filters shall be standard on TWE060, TWE072, TWE090, TWE120 model air handlers from the factory. The filter rack can be field converted to two inch capability. Two inch, throw-away filters shall be standard on TWE180 and TWE240 models.

Performance Data

Gross Cooling Capacities

Table 11. Gross cooling capacities (MBH) 6 tons TWA0724*A heat pump with 7.5 tons TWE0904*A air handler (IP)

CFM	Ent DB (°F)	Ambient Temperature (°F) 85						Ambient Temperature (°F) 95						Ambient Temperature (°F) 105					
		Entering Wet Bulb (°F)						Entering Wet Bulb (°F)						Entering Wet Bulb (°F)					
		61		67		73		61		67		73		61		67		73	
		MBH	SHC	MBH	SHC	MBH	SHC	MBH	SHC	MBH	SHC	MBH	SHC	MBH	SHC	MBH	SHC	MBH	SHC
2100	75	75.3	62.7	83.7	48.6	92.7	33.9	71.6	60.9	79.5	46.8	88.0	32.2	67.7	59.1	75.1	45.1	83.2	30.5
	80	75.9	74.2	83.5	60.1	92.5	45.5	72.3	72.3	79.3	58.3	87.8	43.8	68.8	68.8	75.0	56.6	83.0	42.1
	85	79.2	79.2	83.6	71.5	92.3	57.1	76.0	76.0	79.5	69.8	87.6	55.4	72.7	72.7	75.2	68.0	82.8	53.7
	90	84.3	83.1	84.3	83.1	92.1	68.6	80.0	80.0	80.4	80.4	87.5	66.9	76.6	76.6	76.7	76.7	82.8	65.2
2400	75	77.3	67.5	85.6	51.4	94.5	34.7	73.4	65.7	81.2	49.7	89.6	33.0	69.3	63.9	76.6	47.9	84.7	31.2
	80	78.5	78.5	85.4	64.6	94.3	48.0	75.2	75.2	81.0	62.8	89.4	46.3	71.7	71.7	76.6	61.0	84.5	44.5
	85	82.8	82.8	85.7	77.6	94.1	61.2	79.4	79.4	81.4	75.9	89.2	59.5	75.8	75.8	77.1	74.1	84.3	57.8
	90	87.2	87.2	87.3	87.3	94.0	74.3	83.6	83.6	83.7	83.7	89.3	72.6	79.9	79.9	80.0	80.0	84.4	70.9
2640	75	78.6	71.4	86.7	53.6	95.7	35.3	74.6	69.5	82.2	51.9	90.7	33.5	70.5	67.7	77.6	50.1	85.6	31.8
	80	80.8	80.8	86.6	68.0	95.5	49.9	77.3	77.3	82.2	66.3	90.5	48.2	73.7	73.7	77.6	64.4	85.4	46.4
	85	85.3	85.3	87.1	82.5	95.2	64.5	81.7	81.7	82.8	80.7	90.3	62.7	77.9	77.9	78.4	78.4	85.2	61.0
	90	89.8	89.8	89.9	89.9	95.3	78.9	86.0	86.0	86.2	86.2	90.4	77.1	82.1	82.1	82.2	82.2	85.5	75.4
2880	75	79.8	75.2	87.7	55.8	96.6	35.8	75.7	73.3	83.1	54.1	91.6	34.1	71.5	71.5	78.4	52.3	86.4	32.3
	80	82.8	82.8	87.7	71.5	96.4	51.8	79.2	79.2	83.2	69.7	91.4	50.1	75.4	75.4	78.5	67.9	86.2	48.3
	85	87.4	87.4	88.4	87.4	96.2	67.7	83.7	83.7	84.1	84.1	91.1	66.0	79.7	79.7	79.9	79.9	86.0	64.1
	90	92.1	92.1	92.2	92.2	96.4	83.4	88.1	88.1	88.3	88.3	91.5	81.6	84.1	84.1	84.2	84.2	86.4	79.8

CFM	Ambient Temperature (°F) 115						Ambient Temperature (°F) 125					
	Entering Wet Bulb (°F)						Entering Wet Bulb (°F)					
	61		67		73		61		67		73	
	MBH	SHC	MBH	SHC	MBH	SHC	MBH	SHC	MBH	SHC	MBH	SHC
2100	63.5	57.2	70.6	43.2	78.2	28.7	59.1	55.2	65.6	41.3	72.7	26.8
	65.3	65.3	70.5	54.7	78.0	40.4	61.5	61.5	65.6	52.7	72.5	38.5
	69.1	69.1	70.8	66.2	77.8	51.9	65.2	65.2	66.0	64.2	72.4	50.1
	72.9	72.9	73.0	73.0	77.8	63.4	68.8	68.8	68.9	68.9	72.5	61.5
2400	65.1	62.0	71.9	46.0	79.4	29.4	60.6	59.9	66.8	44.1	73.8	27.5
	68.0	68.0	71.9	59.1	79.2	42.7	64.0	64.0	66.9	57.1	73.6	40.8
	71.9	71.9	72.5	72.3	79.1	56.0	67.8	67.8	67.9	67.9	73.5	54.0
	75.9	75.9	76.0	76.0	79.3	69.0	71.5	71.5	71.6	71.6	73.8	67.1
2640	66.2	65.8	72.7	48.2	80.3	30.0	61.7	61.7	67.5	46.2	74.5	28.1
	69.8	69.8	72.8	62.5	80.1	44.6	65.6	65.6	67.7	60.5	74.3	42.7
	73.9	73.9	74.0	74.0	79.9	59.1	69.5	69.5	69.6	69.6	74.3	57.1
	77.9	77.9	78.1	78.0	80.3	73.5	73.3	73.3	73.4	73.4	74.7	71.6
2880	67.3	67.3	73.4	50.4	80.9	30.5	63.1	63.1	68.1	48.4	75.1	28.6
	71.4	71.4	73.7	66.0	80.8	46.5	67.1	67.1	68.5	64.0	74.9	44.6
	75.6	75.6	75.7	75.7	80.7	62.3	71.0	71.0	71.1	71.1	74.9	60.3
	79.7	79.7	79.8	79.8	81.2	78.0	74.9	74.9	75.0	75.0	75.5	75.5

Notes:

1. All capacities shown are gross and have not considered indoor fan heat. To obtain net cooling, subtract indoor fan heat.
2. MBh = Total Gross Capacity, SHC = Sensible Heat Capacity

Table 12. Gross cooling capacities (MBH) 6 tons TWA0724*D heat pump with 6 tons TWE0724*B air handler (IP)

CFM	Ent DB (°F)	Ambient Temperature (°F) 85						Ambient Temperature (°F) 95						Ambient Temperature (°F) 105					
		Entering Wet Bulb (°F)						Entering Wet Bulb (°F)						Entering Wet Bulb (°F)					
		61		67		73		61		67		73		61		67		73	
		MBH	SHC	MBH	SHC	MBH	SHC	MBH	SHC	MBH	SHC	MBH	SHC	MBH	SHC	MBH	SHC	MBH	SHC
2160	75	73.1	62.1	81.2	48.0	90.2	33.1	70.0	60.7	77.7	46.6	86.4	31.8	66.8	59.2	74.1	45.1	82.4	30.4
	80	73.8	72.6	80.9	59.5	89.8	45.0	71.0	70.8	77.5	58.1	86.0	43.6	68.2	68.2	74.0	56.6	82.4	42.3
	85	77.4	77.4	81.0	71.1	89.4	56.7	74.8	74.8	77.7	69.7	85.6	55.3	72.0	72.0	74.2	68.2	81.6	53.9
	90	82.0	81.2	82.0	81.2	89.3	68.3	78.7	78.7	78.9	78.9	85.5	66.9	75.8	75.8	76.0	76.0	81.6	65.4
2400	75	74.5	65.9	82.6	50.2	91.6	33.8	71.4	64.5	79.0	48.8	87.7	32.4	68.1	63.0	75.3	47.3	83.5	31.0
	80	76.0	76.0	82.3	63.0	91.2	46.9	73.3	73.3	78.9	61.6	87.3	45.5	70.5	70.5	75.2	60.1	83.1	44.1
	85	80.2	80.2	82.6	75.9	90.9	59.9	77.4	77.4	79.2	74.5	86.9	58.5	74.4	74.4	75.6	73.0	82.9	57.0
	90	84.4	84.4	84.6	84.6	90.8	72.8	81.5	81.5	81.7	81.7	86.9	71.3	78.4	78.4	78.6	78.6	82.8	69.8
2640	75	75.8	69.7	83.7	52.4	92.8	34.3	72.7	68.2	80.1	51.0	88.8	33.0	69.3	66.7	76.3	49.5	84.5	31.5
	80	78.2	78.2	83.6	66.5	92.4	48.8	75.4	75.4	80.0	65.0	88.3	47.5	72.5	72.5	76.3	63.5	84.0	46.0
	85	82.6	82.6	84.1	80.7	92.1	63.1	79.7	79.7	80.6	79.3	88.0	61.6	76.6	76.6	77.1	75.8	83.9	60.1
	90	87.0	87.0	87.2	87.2	92.1	77.2	83.9	83.9	84.1	84.1	88.2	75.8	80.7	80.7	80.8	80.8	83.9	74.3
2880	75	77.0	73.4	84.7	54.6	93.8	34.9	73.8	72.0	81.0	53.1	89.6	33.5	70.4	69.5	77.1	51.6	85.3	32.1
	80	80.3	80.3	84.7	69.9	93.3	50.7	77.3	77.3	81.1	68.4	89.1	49.3	74.2	74.2	77.2	66.9	84.9	47.9
	85	84.7	84.7	85.4	85.0	93.1	66.2	81.6	81.6	82.1	81.6	89.0	64.7	78.4	78.4	78.6	78.6	84.7	63.2
	90	89.3	89.3	89.4	89.4	93.3	81.7	86.1	86.1	86.2	86.2	89.2	80.2	82.6	82.6	82.7	82.7	85.0	78.7

CFM	Ent DB (°F)	Ambient Temperature (°F) 115						Ambient Temperature (°F) 125					
		Entering Wet Bulb (°F)						Entering Wet Bulb (°F)					
		61		67		73		61		67		73	
		MBH	SHC	MBH	SHC	MBH	SHC	MBH	SHC	MBH	SHC	MBH	SHC
2160	75	63.5	57.6	70.3	43.6	78.2	28.9	59.9	56.0	66.3	42.0	73.7	27.4
	80	65.3	65.3	70.2	55.1	77.8	40.7	62.3	62.3	66.3	53.5	73.3	39.2
	85	69.0	69.0	70.5	66.7	77.5	52.4	65.8	65.8	66.6	64.7	73.0	50.8
	90	72.8	72.8	72.9	72.9	77.5	63.9	69.4	69.4	69.5	69.5	73.1	62.3
2400	75	64.7	61.4	71.4	45.8	79.2	29.5	61.1	59.3	67.3	44.1	74.6	28.0
	80	67.5	67.5	71.4	58.5	78.8	42.6	64.2	64.2	67.3	56.9	74.2	41.1
	85	71.3	71.3	72.0	70.0	78.6	55.5	67.9	67.9	68.3	67.5	74.0	53.8
	90	75.2	75.2	75.3	75.3	78.7	68.3	71.6	71.6	71.7	71.7	74.2	66.7
2640	75	65.8	64.5	72.3	47.9	80.0	30.1	62.4	61.4	68.1	46.2	75.3	28.5
	80	69.3	69.3	72.4	61.9	79.6	44.5	65.9	65.9	68.2	60.3	74.9	42.9
	85	73.3	73.3	73.4	73.4	79.5	58.6	69.7	69.7	69.8	69.8	74.9	56.9
	90	77.3	77.3	77.4	77.4	79.7	72.8	73.6	73.6	73.7	73.7	75.2	71.1
2880	75	67.0	66.6	73.1	49.9	80.7	30.6	63.5	63.5	68.8	48.2	75.9	29.1
	80	70.9	70.9	73.2	65.3	80.4	46.3	67.4	67.4	69.0	63.6	75.6	44.7
	85	75.0	75.0	75.1	75.1	80.3	61.6	71.3	71.3	71.4	71.4	75.6	60.0
	90	79.1	79.1	79.2	79.2	80.7	77.2	75.2	75.2	75.3	75.3	76.1	73.6

Notes:

1. All capacities shown are gross and have not considered indoor fan heat. To obtain net cooling, subtract indoor fan heat.
2. MBh = Total Gross Capacity, SHC = Sensible Heat Capacity

Table 13. Gross cooling capacities (MBH) 7.5 tons TWA0904*A heat pump with 7.5 tons TWE0904*A air handler (IP)

		Ambient Temperature (°F)						Ambient Temperature (°F)						Ambient Temperature (°F)					
		85						95						105					
	Ent DB	Entering Wet Bulb (°F)						Entering Wet Bulb (°F)						Entering Wet Bulb (°F)					
		61		67		73		61		67		73		61		67		73	
CFM	(°F)	MBH	SHC	MBH	SHC	MBH	SHC	MBH	SHC	MBH	SHC	MBH	SHC	MBH	SHC	MBH	SHC	MBH	SHC
2625	75	88.8	75.9	97.7	57.9	107.1	39.2	84.2	73.8	92.4	55.8	101.1	37.1	79.3	71.5	86.9	53.5	94.9	34.9
	80	89.8	89.8	97.6	72.3	106.9	53.8	85.6	85.6	92.3	70.2	101.0	51.7	81.3	81.3	86.8	68.0	94.8	49.5
	85	94.1	94.1	97.9	86.7	106.8	68.3	90.0	90.0	92.7	84.6	100.8	66.2	85.6	85.6	87.3	82.4	94.6	64.0
	90	99.1	99.1	99.1	99.1	106.7	82.8	94.4	94.4	94.6	94.6	100.9	80.7	89.8	89.8	89.9	89.9	94.7	78.5
3000	75	90.9	81.9	99.5	61.3	108.8	40.1	86.1	79.7	94.0	59.2	102.6	38.0	81.0	77.5	88.2	56.9	96.2	35.8
	80	93.1	93.1	99.4	77.8	108.7	56.8	88.8	88.8	94.0	75.6	102.5	54.6	84.3	84.3	88.3	73.4	96.1	52.4
	85	97.9	97.9	100.0	94.3	108.5	73.4	93.4	93.4	94.7	92.1	102.4	71.2	88.6	88.6	89.2	89.2	95.9	69.0
	90	102.7	102.7	102.9	102.9	108.7	89.9	98.0	98.0	98.2	98.2	102.6	87.7	93.0	93.0	93.1	93.1	96.3	85.5
3300	75	92.2	86.6	100.7	64.0	109.9	40.8	87.3	84.4	95.0	61.9	103.6	38.6	82.2	82.2	89.1	59.6	97.1	36.4
	80	95.5	95.5	100.7	82.1	109.8	59.1	91.0	91.0	95.1	79.9	103.5	57.0	86.2	86.2	89.3	77.7	96.9	54.8
	85	100.4	100.4	101.5	100.3	109.6	77.4	95.7	95.7	96.2	96.2	103.3	75.2	90.7	90.7	90.8	90.8	96.8	73.0
	90	105.4	105.4	105.6	105.6	109.9	95.5	100.5	100.5	100.6	100.6	103.7	93.3	95.2	95.2	95.3	95.3	97.3	91.1
3600	75	93.5	91.4	101.6	66.7	110.9	41.4	88.5	88.5	95.9	64.5	104.4	39.3	83.4	83.4	89.9	62.3	97.8	37.1
	80	97.5	97.5	101.7	86.4	110.7	61.4	92.9	92.9	96.1	84.2	104.3	59.3	87.9	87.9	90.2	81.9	97.6	57.1
	85	102.6	102.6	103.0	103.0	110.6	81.4	97.7	97.7	97.8	97.8	104.2	79.2	92.5	92.5	92.6	92.6	97.6	76.9
	90	107.8	107.8	107.9	107.9	111.1	101.1	102.6	102.6	102.7	102.7	104.8	98.9	97.0	97.0	97.1	97.1	98.3	96.7

		Ambient Temperature (°F)						Ambient Temperature (°F)					
		115						125					
	Ent DB	Entering Wet Bulb (°F)						Entering Wet Bulb (°F)					
		61		67		73		61		67		73	
CFM	(°F)	MBH	SHC	MBH	SHC	MBH	SHC	MBH	SHC	MBH	SHC	MBH	SHC
2625	75	74.2	69.2	81.0	51.2	88.3	32.7	68.6	66.7	74.6	48.8	81.2	30.3
	80	76.8	76.8	81.0	65.7	88.2	47.3	71.7	71.7	74.7	63.1	81.1	44.8
	85	80.7	80.7	81.6	80.1	88.1	61.8	75.4	75.4	75.5	75.5	81.0	59.4
	90	84.7	84.7	84.8	84.8	88.3	76.2	79.1	79.1	79.2	79.2	81.3	73.7
3000	75	75.7	75.1	82.2	54.6	89.4	33.5	70.1	70.1	75.6	52.1	82.1	31.1
	80	79.4	79.4	82.3	71.0	89.3	50.2	73.9	73.9	75.8	68.5	82.0	47.7
	85	83.5	83.5	83.6	83.6	89.2	66.8	77.8	77.8	77.8	77.8	82.0	64.3
	90	87.6	87.6	87.7	87.7	89.6	83.2	81.5	81.5	81.6	81.6	82.5	80.7
3300	75	76.9	76.9	82.9	57.3	90.1	34.1	71.5	71.5	76.2	54.8	82.7	31.7
	80	81.1	81.1	83.2	75.3	90.0	52.5	75.4	75.4	76.6	72.8	82.6	50.1
	85	85.3	85.3	85.4	85.4	90.0	70.7	79.3	79.3	79.4	79.4	82.6	68.2
	90	89.5	89.5	89.6	89.6	90.6	88.8	83.1	83.1	83.2	83.2	83.4	83.4
3600	75	78.3	78.3	83.5	59.9	90.7	34.8	72.7	72.7	76.7	57.4	83.2	32.3
	80	82.6	82.6	84.0	79.6	90.6	54.8	76.7	76.7	77.3	77.0	83.0	52.4
	85	86.9	86.9	87.0	87.0	90.6	74.6	80.7	80.7	80.7	80.7	83.2	72.1
	90	91.1	91.1	91.2	91.2	91.5	91.5	84.5	84.5	84.6	84.6	84.7	84.7

Notes:

1. All capacities shown are gross and have not considered indoor fan heat. To obtain net cooling, subtract indoor fan heat.
2. MBh = Total Gross Capacity, SHC = Sensible Heat Capacity

Table 14. Gross cooling capacities (MBH) 7.5 tons TWA0904*D heat pump with 7.5 tons TWE0904*B air handler (IP)

CFM	Ent DB (°F)	Ambient Temperature (°F) 85						Ambient Temperature (°F) 95						Ambient Temperature (°F) 105					
		Entering Wet Bulb (°F)						Entering Wet Bulb (°F)						Entering Wet Bulb (°F)					
		61		67		73		61		67		73		61		67		73	
		MBH	SHC	MBH	SHC	MBH	SHC	MBH	SHC	MBH	SHC	MBH	SHC	MBH	SHC	MBH	SHC	MBH	SHC
2700	75	89.8	77.4	99.9	59.3	110.5	40.5	86.4	75.9	95.9	57.7	106.2	39.0	82.8	74.2	91.7	56.1	101.4	37.3
	80	90.7	90.2	99.2	73.9	109.9	55.3	87.5	87.5	95.2	72.3	105.5	53.8	84.4	84.4	91.0	70.6	100.7	52.1
	85	95.1	95.1	99.0	88.6	109.2	70.1	92.0	92.0	95.1	87.0	104.6	68.4	88.7	88.7	91.0	85.3	100.0	66.8
	90	100.2	100.2	100.2	100.2	108.6	84.7	96.5	96.5	96.6	96.6	104.1	83.1	93.1	93.1	93.2	93.2	99.3	81.4
3000	75	91.6	82.3	101.5	62.1	112.2	41.3	88.0	80.7	97.4	60.5	107.7	39.7	84.3	79.1	93.1	58.8	102.5	38.0
	80	93.3	93.3	100.8	78.4	111.5	57.8	90.3	90.3	96.8	76.8	106.9	56.2	87.0	87.0	92.4	75.1	102.1	54.5
	85	98.3	98.3	100.9	94.7	110.8	74.2	95.0	95.0	96.8	93.1	106.1	72.5	91.5	91.5	92.7	91.2	101.3	70.9
	90	103.3	103.3	103.4	103.4	110.3	90.5	99.7	99.7	99.9	99.9	105.7	88.9	96.1	96.1	96.2	96.2	100.4	87.0
3300	75	93.1	87.1	102.9	64.9	113.6	42.0	89.5	85.5	98.6	63.2	108.9	40.4	85.7	83.9	94.1	61.5	103.6	38.7
	80	96.0	96.0	102.2	82.8	112.9	60.2	92.8	92.8	98.0	81.1	108.2	58.6	89.3	89.3	93.6	79.4	102.9	56.8
	85	101.1	101.1	102.6	100.9	112.2	78.2	97.6	97.6	98.5	98.0	107.3	76.6	93.9	93.9	94.4	94.1	102.4	74.9
	90	106.3	106.3	106.4	106.4	111.8	96.2	102.5	102.5	102.7	102.7	107.1	94.6	98.6	98.6	98.7	98.7	101.7	92.7
3600	75	94.5	91.9	104.1	67.7	114.7	42.7	90.8	89.9	99.6	66.0	109.9	41.1	87.0	86.7	95.0	64.3	104.5	39.4
	80	98.3	98.3	103.4	87.2	114.0	62.6	94.9	94.9	99.1	85.5	109.2	61.0	91.3	91.3	94.6	83.8	104.1	59.3
	85	103.6	103.6	104.2	104.2	113.3	82.3	99.7	99.7	100.0	100.0	108.3	80.6	96.1	96.1	95.9	95.9	103.3	78.9
	90	108.8	108.8	109.0	109.0	113.1	101.9	105.0	105.0	105.1	105.1	108.0	100.2	100.8	100.8	100.9	100.9	102.8	98.4

CFM	Ent DB (°F)	Ambient Temperature (°F) 115						Ambient Temperature (°F) 125					
		Entering Wet Bulb (°F)						Entering Wet Bulb (°F)					
		61		67		73		61		67		73	
		MBH	SHC	MBH	SHC	MBH	SHC	MBH	SHC	MBH	SHC	MBH	SHC
2700	75	78.9	72.5	87.4	54.4	96.3	35.5	74.9	70.7	82.8	52.6	91.3	33.9
	80	81.1	81.1	86.7	69.0	95.7	50.4	77.6	77.6	82.2	67.2	90.3	48.5
	85	85.3	85.3	86.8	83.7	95.0	65.1	81.5	81.5	82.4	79.8	89.6	63.3
	90	89.4	89.4	89.5	89.5	94.6	79.8	85.4	85.4	85.5	85.5	89.2	78.0
3000	75	80.4	77.3	88.6	57.1	97.7	36.3	76.4	74.8	83.9	55.3	92.1	34.4
	80	83.5	83.5	88.0	73.4	96.9	52.8	79.8	79.8	83.4	71.6	91.3	50.9
	85	87.8	87.8	88.4	86.9	96.2	69.2	83.9	83.9	84.2	84.2	90.8	67.3
	90	92.1	92.1	92.2	92.2	95.9	85.5	87.9	87.9	88.0	88.0	90.6	83.7
3300	75	81.7	80.8	89.6	59.8	98.7	37.0	77.7	77.3	84.8	58.0	93.1	35.2
	80	85.7	85.7	89.1	77.7	97.9	55.2	81.8	81.8	84.3	75.9	92.4	53.3
	85	90.0	90.0	90.2	90.2	97.2	73.2	85.9	85.9	86.1	86.1	91.6	71.3
	90	94.6	94.6	94.7	94.7	97.1	91.2	90.0	90.0	90.1	90.1	91.4	88.6
3600	75	83.1	83.1	90.4	62.5	99.5	37.7	79.1	79.1	85.5	60.7	93.8	35.9
	80	87.5	87.5	90.1	82.1	98.8	57.5	83.5	83.5	85.2	80.3	92.9	55.6
	85	92.0	92.0	92.1	92.1	98.1	77.2	87.6	87.6	87.7	87.7	92.4	75.3
	90	96.7	96.7	96.8	96.8	98.2	96.2	91.8	91.8	91.9	91.9	92.5	90.8

Notes:

1. All capacities shown are gross and have not considered indoor fan heat. To obtain net cooling, subtract indoor fan heat.
2. MBh = Total Gross Capacity, SHC = Sensible Heat Capacity

Table 15. Gross cooling capacities (MBH) 10 tons TWA1204*A heat pump with 10 tons TWE1204*A air handler (IP)

		Ambient Temperature (°F)						Ambient Temperature (°F)						Ambient Temperature (°F)					
		85						95						105					
		Entering Wet Bulb (°F)						Entering Wet Bulb (°F)						Entering Wet Bulb (°F)					
	Ent DB	61		67		73		61		67		73		61		67		73	
CFM	(°F)	MBH	SHC	MBH	SHC	MBH	SHC	MBH	SHC	MBH	SHC	MBH	SHC	MBH	SHC	MBH	SHC	MBH	SHC
3600	75	117.8	101.8	131.4	78.2	146.2	53.6	112.6	99.4	125.5	75.8	139.5	51.2	107.0	96.9	119.1	73.3	132.4	48.8
	80	119.2	119.2	131.0	97.8	145.8	73.4	114.4	114.4	125.2	95.3	139.2	71.0	109.7	109.7	118.8	92.8	132.1	68.6
	85	125.4	125.4	131.2	117.1	145.4	93.1	120.9	120.9	125.4	114.7	138.8	90.8	116.0	116.0	119.3	112.2	131.7	88.3
	90	132.8	132.8	132.8	132.8	145.1	112.6	127.5	127.5	127.7	127.7	138.6	110.2	122.4	122.4	122.6	122.6	131.6	107.7
4000	75	120.1	108.2	133.6	82.0	148.5	54.7	114.7	105.8	127.5	79.6	141.6	52.3	109.0	103.2	121.0	77.0	134.3	49.8
	80	122.7	122.7	133.3	103.6	148.1	76.7	118.1	118.1	127.3	101.2	141.2	74.3	113.1	113.1	120.7	98.5	133.9	71.8
	85	129.7	129.7	133.8	125.2	147.7	98.6	124.9	124.9	127.9	122.8	140.9	96.2	119.7	119.7	121.6	120.3	133.6	93.7
	90	136.8	136.8	137.1	137.1	147.5	120.1	131.8	131.8	132.1	132.1	140.8	117.7	126.4	126.4	126.6	126.6	133.6	115.2
4400	75	122.1	114.6	135.5	85.7	150.4	55.7	116.7	112.1	129.2	83.3	143.4	53.3	110.8	109.5	122.5	80.7	135.9	50.7
	80	126.2	126.2	135.3	109.4	150.0	79.9	121.4	121.4	129.0	106.9	143.0	77.5	116.2	116.2	122.3	104.3	135.5	75.0
	85	133.5	133.5	136.1	133.3	149.6	104.0	128.5	128.5	130.0	130.0	142.6	101.5	123.0	123.0	123.7	123.7	135.2	98.9
	90	140.9	140.9	141.1	141.1	149.6	127.7	135.6	135.6	135.8	135.8	142.7	125.2	129.9	129.9	130.1	130.1	135.4	122.7
4800	75	124.0	120.9	137.1	89.4	152.0	56.6	118.4	118.4	130.7	86.9	144.8	54.2	112.5	112.5	123.8	84.3	137.2	51.7
	80	129.3	129.3	136.9	115.1	151.6	83.1	124.3	124.3	130.5	112.6	144.4	80.7	118.9	118.9	123.8	110.0	136.8	78.1
	85	136.8	136.8	138.2	138.2	151.3	109.3	131.6	131.6	132.2	132.2	144.1	106.8	125.9	125.9	126.1	126.1	136.5	104.1
	90	144.5	144.5	144.7	144.7	151.4	135.2	139.0	139.0	139.2	139.2	144.4	132.7	133.0	133.0	133.2	133.2	137.0	130.1

		Ambient Temperature (°F)						Ambient Temperature (°F)					
		115						125					
		Entering Wet Bulb (°F)						Entering Wet Bulb (°F)					
	Ent DB	61		67		73		61		67		73	
CFM	(°F)	MBH	SHC	MBH	SHC	MBH	SHC	MBH	SHC	MBH	SHC	MBH	SHC
3600	75	101.1	94.2	112.3	70.6	124.9	46.1	94.7	91.3	104.9	67.8	116.6	43.3
	80	104.5	104.5	112.1	90.0	124.5	65.9	98.9	98.9	104.8	87.1	116.2	63.1
	85	110.6	110.6	112.7	109.5	124.2	85.6	104.7	104.7	105.6	105.6	115.9	82.8
	90	116.8	116.8	117.0	117.0	124.1	105.0	110.6	110.6	110.8	110.8	116.0	102.1
4000	75	103.0	100.5	113.9	74.3	126.5	47.1	96.4	96.4	106.3	71.4	118.0	44.3
	80	107.8	107.8	113.8	95.8	126.1	69.1	101.8	101.8	106.3	92.8	117.6	66.3
	85	114.1	114.1	114.9	114.9	125.8	90.9	107.9	107.9	108.0	108.0	117.4	88.0
	90	120.5	120.5	120.7	120.7	126.0	112.5	114.0	114.0	114.2	114.2	117.7	109.6
4400	75	104.7	104.7	115.3	78.0	127.9	48.1	98.2	98.2	107.5	75.1	119.2	45.2
	80	110.6	110.6	115.3	101.5	127.5	72.3	104.3	104.3	107.7	98.5	118.8	69.4
	85	117.1	117.1	117.3	117.3	127.2	96.2	110.6	110.6	110.7	110.7	118.6	93.2
	90	123.8	123.8	123.9	123.9	127.6	120.0	116.9	116.9	117.1	117.1	119.2	117.0
4800	75	106.4	106.4	116.4	81.6	129.0	49.0	100.2	100.2	108.5	78.6	120.2	46.1
	80	113.0	113.0	116.6	107.2	128.7	75.5	106.6	106.6	108.8	104.2	119.8	72.6
	85	119.8	119.8	119.9	119.9	128.4	101.4	113.0	113.0	113.1	113.1	119.6	98.3
	90	126.6	126.6	126.8	126.8	129.1	127.4	119.5	119.5	119.6	119.6	120.6	120.6

Notes:

1. All capacities shown are gross and have not considered indoor fan heat. To obtain net cooling, subtract indoor fan heat.
2. MBh = Total Gross Capacity, SHC = Sensible Heat Capacity

Table 16. Gross cooling capacities (MBH) 10 tons TWA1204*D heat pump with 10 tons TWE1204*B air handler (IP)

CFM	Ent DB (°F)	Ambient Temperature (°F) 85						Ambient Temperature (°F) 95						Ambient Temperature (°F) 105					
		Entering Wet Bulb (°F)						Entering Wet Bulb (°F)						Entering Wet Bulb (°F)					
		61		67		73		61		67		73		61		67		73	
		MBH	SHC	MBH	SHC	MBH	SHC	MBH	SHC	MBH	SHC	MBH	SHC	MBH	SHC	MBH	SHC	MBH	SHC
3600	75	115.3	100.8	128.6	77.2	142.9	52.5	109.8	98.3	122.4	74.7	136.0	50.0	104.1	95.6	115.9	72.2	128.8	47.5
	80	116.9	116.7	128.3	96.8	142.6	72.4	112.0	112.0	122.1	94.2	135.6	69.9	107.1	107.1	115.7	91.6	128.4	67.4
	85	123.2	123.2	128.5	116.1	142.3	92.1	118.4	118.4	122.5	113.6	135.3	89.7	113.3	113.3	116.2	111.0	128.1	87.2
	90	130.5	130.5	130.5	130.5	142.1	111.6	124.9	124.9	124.7	124.7	135.2	109.1	119.7	119.7	119.9	119.9	128.1	106.5
4000	75	117.5	107.1	130.7	81.0	145.1	53.5	111.9	104.6	124.3	78.5	137.9	51.1	106.1	102.0	117.6	75.9	130.5	48.5
	80	120.4	120.4	130.5	102.6	144.8	75.6	115.5	115.5	124.1	100.0	137.6	73.1	110.4	110.4	117.5	97.3	130.2	70.6
	85	127.3	127.3	131.0	124.2	144.4	97.6	122.3	122.3	124.8	121.7	137.3	95.1	117.0	117.0	118.4	117.8	129.9	92.4
	90	134.3	134.3	134.5	134.5	144.3	119.1	129.0	129.0	129.2	129.2	137.2	116.6	123.5	123.5	123.7	123.7	130.0	114.0
4400	75	119.5	113.5	132.5	84.7	146.9	54.5	113.8	110.9	125.9	82.1	139.5	52.0	107.8	107.3	119.0	79.5	131.9	49.5
	80	123.8	123.8	132.4	108.3	146.6	78.8	118.7	118.7	125.8	105.7	139.2	76.3	113.4	113.4	119.0	103.0	131.6	73.8
	85	130.9	130.9	133.2	132.0	146.2	102.9	125.6	125.6	126.9	126.9	138.9	100.3	120.1	120.1	120.7	120.7	131.4	97.7
	90	138.2	138.2	138.4	138.4	146.2	126.6	132.6	132.6	132.8	132.8	139.1	124.0	126.8	126.8	127.0	127.0	131.7	121.4
4800	75	121.3	119.8	134.0	88.3	148.4	55.5	115.4	115.4	127.3	85.7	140.9	53.0	109.5	109.5	120.3	83.0	133.2	50.4
	80	126.7	126.7	133.9	114.1	148.1	82.0	121.5	121.5	127.2	111.4	140.6	79.5	115.9	115.9	120.4	108.7	132.8	77.0
	85	134.1	134.1	135.3	135.3	147.8	108.1	128.6	128.6	129.1	129.1	140.4	105.5	122.8	122.8	122.5	122.5	132.7	102.9
	90	141.6	141.6	141.8	141.8	148.0	134.1	135.8	135.8	136.0	136.0	140.7	131.5	129.7	129.7	129.9	129.9	133.2	128.9

CFM	Ent DB (°F)	Ambient Temperature (°F) 115						Ambient Temperature (°F) 125					
		Entering Wet Bulb (°F)						Entering Wet Bulb (°F)					
		61		67		73		61		67		73	
		MBH	SHC	MBH	SHC	MBH	SHC	MBH	SHC	MBH	SHC	MBH	SHC
3600	75	98.2	93.0	109.1	69.5	121.3	45.0	92.0	90.2	102.0	66.8	113.4	42.3
	80	102.0	102.0	109.0	88.9	121.0	64.9	96.6	96.6	102.0	86.1	113.1	62.2
	85	108.0	108.0	109.7	108.2	120.7	84.5	102.4	102.4	103.2	101.8	112.8	81.7
	90	114.1	114.1	114.3	114.3	120.7	103.9	108.2	108.2	108.4	108.4	113.0	101.1
4000	75	100.0	98.9	110.6	73.2	122.8	46.0	93.8	93.8	103.4	70.4	114.7	43.3
	80	105.1	105.1	110.6	94.6	122.5	68.0	99.4	99.4	103.5	91.8	114.4	65.4
	85	111.4	111.4	112.1	111.6	122.3	89.8	105.4	105.4	104.6	104.6	114.2	86.9
	90	117.7	117.7	117.8	117.8	122.5	111.3	111.4	111.4	111.5	111.5	114.6	108.6
4400	75	101.8	101.8	112.0	76.8	124.1	46.9	95.7	95.7	104.6	73.9	115.8	44.2
	80	107.8	107.8	112.1	100.3	123.8	71.2	101.8	101.8	104.8	97.4	115.4	68.5
	85	114.2	114.2	114.4	114.4	123.6	95.0	108.0	108.0	108.1	108.1	115.4	92.1
	90	120.7	120.7	120.9	120.9	124.1	118.8	114.1	114.1	114.3	114.3	116.0	114.7
4800	75	103.6	103.6	113.1	80.2	125.2	47.8	97.6	97.6	105.6	77.3	116.7	45.1
	80	110.1	110.1	113.3	106.0	124.8	74.4	103.9	103.9	105.9	103.1	116.4	71.5
	85	116.7	116.7	116.9	116.9	124.8	100.1	110.2	110.2	110.3	110.3	116.4	97.3
	90	123.4	123.4	123.5	123.5	125.5	124.6	116.5	116.5	116.6	116.6	117.5	117.1

Notes:

1. All capacities shown are gross and have not considered indoor fan heat. To obtain net cooling, subtract indoor fan heat.
2. MBh = Total Gross Capacity, SHC = Sensible Heat Capacity

Table 17. Gross cooling capacities (MBH) 15 tons TWA1804*D heat pump with 15 tons TWE1804*B air handler (IP)

		Ambient Temperature (°F)						Ambient Temperature (°F)						Ambient Temperature (°F)					
		85						95						105					
		Entering Wet Bulb (°F)						Entering Wet Bulb (°F)						Entering Wet Bulb (°F)					
	Ent DB	61		67		73		61		67		73		61		67		73	
CFM	(°F)	MBH	SHC	MBH	SHC	MBH	SHC	MBH	SHC	MBH	SHC	MBH	SHC	MBH	SHC	MBH	SHC	MBH	SHC
5400	75	184.0	156.1	204.5	120.3	227.1	83.2	175.8	152.2	195.3	116.7	217.1	79.6	167.2	148.2	185.7	112.8	206.5	75.9
	80	185.7	182.4	204.0	149.7	226.6	113.0	178.3	177.3	195.0	145.9	216.6	109.4	170.3	170.3	185.4	141.9	206.0	105.6
	85	194.4	194.4	204.3	178.8	226.2	142.6	187.4	187.4	195.5	175.0	216.2	139.0	180.0	180.0	186.2	171.1	205.6	135.3
	90	206.7	203.9	206.7	203.9	225.8	171.9	197.6	197.6	198.3	198.3	216.0	168.2	189.9	189.9	190.2	190.2	205.6	164.4
6000	75	187.6	165.6	208.0	126.0	230.8	84.8	179.2	161.7	198.6	122.3	220.5	81.2	170.4	157.7	188.6	118.4	209.5	77.4
	80	191.0	191.0	207.7	158.5	230.3	117.9	183.4	183.4	198.4	154.7	220.0	114.3	175.8	175.8	188.5	150.7	209.1	110.5
	85	201.1	201.1	208.4	190.9	229.9	150.9	193.8	193.8	199.4	187.1	219.6	147.2	186.0	186.0	189.8	183.2	208.7	143.3
	90	212.0	212.0	212.7	212.7	229.7	183.3	204.5	204.5	204.8	204.8	219.6	179.6	196.4	196.4	196.7	196.7	208.9	175.6
6600	75	190.8	175.1	211.0	131.6	233.9	86.4	182.2	171.2	201.3	127.9	223.3	82.7	173.2	167.1	191.0	123.9	212.1	78.9
	80	196.0	196.0	210.7	167.2	233.4	122.8	188.6	188.6	201.2	163.3	222.9	119.1	180.7	180.7	191.2	159.2	211.7	115.3
	85	207.1	207.1	212.0	203.0	233.0	158.9	199.4	199.4	202.9	199.2	222.5	155.1	191.2	191.2	193.2	193.0	211.4	151.2
	90	218.4	218.4	218.8	218.8	233.1	194.5	210.5	210.5	210.9	210.9	222.8	190.8	202.1	202.1	202.4	202.4	211.9	186.9
7200	75	193.6	184.5	213.5	137.1	236.5	87.9	185.0	180.6	203.6	133.3	225.7	84.2	175.9	175.2	193.2	129.2	214.3	80.4
	80	200.9	200.9	213.4	175.8	236.0	127.6	193.2	193.2	203.7	171.9	225.2	123.9	184.9	184.9	193.5	167.8	213.8	120.1
	85	212.4	212.4	215.4	214.4	235.7	166.8	204.4	204.4	206.2	206.2	225.0	163.1	195.9	195.9	196.8	196.8	213.6	159.1
	90	224.1	224.1	224.5	224.5	236.0	205.7	215.9	215.9	216.2	216.2	225.6	202.0	207.1	207.1	207.4	207.4	214.5	198.0

		Ambient Temperature (°F)						Ambient Temperature (°F)					
		115						125					
		Entering Wet Bulb (°F)						Entering Wet Bulb (°F)					
	Ent DB	61		67		73		61		67		73	
CFM	(°F)	MBH	SHC	MBH	SHC	MBH	SHC	MBH	SHC	MBH	SHC	MBH	SHC
5400	75	158.1	144.0	175.5	108.7	195.3	72.0	148.6	139.6	164.6	104.5	183.3	67.8
	80	162.6	162.6	175.3	137.8	194.8	101.7	154.3	154.3	164.7	133.5	182.9	97.6
	85	172.0	172.0	176.4	167.0	194.4	131.2	163.5	163.5	166.0	162.7	182.6	127.0
	90	181.7	181.7	182.0	182.0	194.6	160.4	172.9	172.9	173.2	173.2	182.9	156.1
6000	75	161.1	153.4	178.0	114.3	198.0	73.5	151.4	149.0	167.0	109.9	185.7	69.3
	80	167.7	167.7	178.2	146.4	197.6	106.6	159.1	159.1	167.3	142.0	185.3	102.4
	85	177.6	177.6	179.9	178.5	197.3	139.2	168.7	168.7	169.8	169.2	185.2	134.9
	90	187.8	187.8	188.1	188.1	197.7	171.6	178.5	178.5	178.7	178.7	185.8	167.3
6600	75	163.9	162.5	180.3	119.6	200.3	75.0	154.2	153.4	169.1	115.2	187.7	70.8
	80	172.2	172.2	180.6	155.0	199.9	111.4	163.2	163.2	169.5	150.5	187.3	107.2
	85	182.5	182.5	183.6	183.6	199.7	147.1	173.2	173.2	173.4	173.4	187.3	142.7
	90	193.1	193.1	193.4	193.4	200.5	182.8	183.3	183.3	183.6	183.6	188.4	178.4
7200	75	166.6	166.4	182.3	124.9	202.2	76.4	156.8	156.8	170.8	120.4	189.4	72.2
	80	176.2	176.2	182.8	163.5	201.8	116.1	166.9	166.9	171.5	159.0	188.9	111.8
	85	186.9	186.9	187.1	187.1	201.8	154.9	177.1	177.1	177.4	177.4	189.1	150.5
	90	197.7	197.7	198.0	198.0	203.0	193.9	187.6	187.6	187.8	187.8	190.4	185.3

Notes:

1. All capacities shown are gross and have not considered indoor fan heat. To obtain net cooling, subtract indoor fan heat.
2. MBh = Total Gross Capacity, SHC = Sensible Heat Capacity

Table 18. Gross cooling capacities (MBH) 20 tons TWA2404*D heat pump with 20 tons TWE2404*B air handler (IP)

		Ambient Temperature (°F)						Ambient Temperature (°F)						Ambient Temperature (°F)					
		85						95						105					
	Ent	Entering Wet Bulb (°F)						Entering Wet Bulb (°F)						Entering Wet Bulb (°F)					
	DB	61		67		73		61		67		73		61		67		73	
CFM	(°F)	MBH	SHC	MBH	SHC	MBH	SHC	MBH	SHC	MBH	SHC	MBH	SHC	MBH	SHC	MBH	SHC	MBH	SHC
7200	75	242.6	207.7	268.9	159.1	296.9	108.9	231.4	202.5	256.4	154.1	282.8	103.9	219.2	197.0	242.9	148.7	267.8	98.6
	80	242.3	242.3	268.5	198.5	296.5	148.7	231.1	231.1	255.9	193.5	282.4	143.7	219.0	219.0	242.4	188.1	267.3	138.5
	85	241.9	241.9	268.0	237.6	296.0	188.4	230.6	230.6	255.5	232.4	281.9	183.4	218.7	218.7	242.1	227.0	266.9	178.1
	90	267.6	267.6	267.6	267.6	295.6	227.9	230.1	230.1	255.0	255.0	281.4	222.9	217.9	217.9	241.6	241.6	266.4	217.6
8000	75	247.0	220.5	273.5	166.7	301.6	111.0	235.4	215.2	260.5	161.6	287.0	105.9	222.8	209.6	246.6	156.1	271.5	100.6
	80	246.8	246.8	273.1	210.5	301.1	155.3	235.1	235.1	260.0	205.4	286.5	150.2	222.6	222.6	246.0	199.9	271.1	144.9
	85	246.4	246.4	272.7	253.7	300.7	199.4	234.8	234.8	259.7	248.5	286.1	194.3	222.3	222.3	245.8	243.0	270.6	189.0
	90	245.7	245.7	272.1	272.1	300.1	243.2	234.0	234.0	259.2	259.2	285.6	238.0	221.5	221.5	245.2	245.2	270.2	232.6
8800	75	250.8	233.1	277.4	174.2	305.5	113.0	238.8	227.8	264.0	169.0	290.5	107.9	225.9	222.1	249.7	163.5	274.6	102.6
	80	250.5	250.5	276.8	222.3	305.0	161.8	238.5	238.5	263.5	217.0	290.1	156.6	225.6	225.6	249.2	211.5	274.2	151.3
	85	250.2	250.2	276.6	269.8	304.6	210.3	238.2	238.2	263.2	263.2	289.6	205.2	225.3	225.3	248.9	248.9	273.7	199.8
	90	253.1	253.1	276.0	276.0	304.0	258.3	244.1	244.1	262.6	262.6	289.1	253.1	228.4	228.4	248.3	248.3	273.3	247.6
9600	75	254.0	245.7	280.7	181.5	308.8	115.0	241.7	240.3	266.9	176.3	293.5	109.8	228.5	228.5	252.3	170.8	277.3	104.5
	80	253.7	253.7	280.1	233.9	308.4	168.2	241.4	241.4	266.5	228.6	293.0	163.0	228.2	228.2	251.9	223.0	276.8	157.7
	85	253.4	253.4	279.9	279.9	307.9	221.1	241.1	241.1	266.2	266.2	292.6	216.0	227.9	227.9	251.6	251.6	276.4	210.6
	90	256.8	256.8	279.3	279.3	307.4	273.4	251.5	251.5	265.6	265.6	292.1	268.1	227.0	227.0	251.0	251.0	276.0	262.6

		Ambient Temperature (°F)						Ambient Temperature (°F)					
		115						125					
	Ent	Entering Wet Bulb (°F)						Entering Wet Bulb (°F)					
	DB	61		67		73		61		67		73	
CFM	(°F)	MBH	SHC	MBH	SHC	MBH	SHC	MBH	SHC	MBH	SHC	MBH	SHC
7200	75	206.1	191.1	228.3	143.0	251.6	93.0	191.6	184.7	212.1	136.7	233.5	86.8
	80	205.9	205.9	227.8	182.4	251.1	132.9	191.4	191.4	211.6	176.0	233.1	126.7
	85	205.6	205.6	227.5	221.2	250.7	172.6	191.1	191.1	211.4	211.4	232.7	166.4
	90	204.8	204.8	227.0	227.0	250.3	211.9	190.3	190.3	210.8	210.8	232.3	205.6
8000	75	209.3	203.7	231.5	150.4	254.8	94.9	194.4	194.4	214.8	144.0	236.3	88.7
	80	209.1	209.1	231.1	194.0	254.4	139.3	194.1	194.1	214.4	187.5	235.8	133.1
	85	208.8	208.8	230.8	230.8	254.0	183.4	193.8	193.8	214.2	214.2	235.4	177.2
	90	208.0	208.0	230.2	230.2	253.6	226.9	193.0	193.0	213.6	213.6	235.1	220.5
8800	75	212.0	212.0	234.2	157.7	257.5	96.8	196.7	196.7	217.2	151.3	238.5	90.6
	80	211.7	211.7	233.8	205.5	257.1	145.6	196.4	196.4	216.8	199.0	238.1	139.3
	85	211.4	211.4	233.6	233.6	256.7	194.2	196.1	196.1	216.5	216.5	237.7	187.9
	90	210.6	210.6	232.9	232.9	256.3	241.8	195.3	195.3	215.9	215.9	237.4	235.4
9600	75	214.3	214.3	236.6	164.9	259.8	98.7	198.7	198.7	219.1	158.5	240.5	92.4
	80	214.0	214.0	236.2	216.9	259.4	151.9	198.4	198.4	218.8	210.4	240.0	145.6
	85	213.7	213.7	235.9	235.9	258.9	204.9	198.1	198.1	218.5	218.5	239.6	198.6
	90	212.8	212.8	235.2	235.2	258.6	256.7	197.2	197.2	217.9	217.9	239.3	239.3

Notes:

1. All capacities shown are gross and have not considered indoor fan heat. To obtain net cooling, subtract indoor fan heat.
2. MBh = Total Gross Capacity, SHC = Sensible Heat Capacity

Table 19. Gross cooling capacities (MBH) 6 tons TWA0724*A condensing unit only (IP)

Outdoor Temp (°F)		Saturation Suction Temperature (°F)					
		30	35	40	45	50	55
65	Head Press (psig)	265.1	271.6	278.5	285.6	293.0	300.7
	Capacity (Btuh/1000)	68.9	75.5	82.6	90.1	98.2	106.9
	Unit Power (kW)	4.4	4.4	4.5	4.5	4.6	4.6
75	Head Press (psig)	303.3	310.1	317.2	324.6	332.3	340.2
	Capacity (Btuh/1000)	65.3	71.6	78.3	85.5	93.2	101.5
	Unit Power (kW)	4.8	4.8	4.9	5.0	5.0	5.1
85	Head Press (psig)	344.9	352.0	359.4	367.1	375.0	383.0
	Capacity (Btuh/1000)	61.6	67.6	74.0	80.8	88.2	96.0
	Unit Power (kW)	5.3	5.3	5.4	5.4	5.5	5.6
95	Head Press (psig)	390.1	397.5	405.2	413.0	421.1	429.3
	Capacity (Btuh/1000)	57.6	63.4	69.5	76.0	83.0	90.5
	Unit Power (kW)	5.8	5.9	5.9	6.0	6.0	6.1
105	Head Press (psig)	439.1	446.8	454.6	462.7	470.9	479.3
	Capacity (Btuh/1000)	53.5	59.0	64.9	71.1	77.8	85.0
	Unit Power (kW)	6.4	6.5	6.5	6.6	6.6	6.7
115	Head Press (psig)	492.0	499.8	507.8	515.9	524.2	532.4
	Capacity (Btuh/1000)	49.2	54.5	60.1	66.1	72.5	79.4
	Unit Power (kW)	7.1	7.2	7.2	7.2	7.3	7.3
125	Head Press (psig)	548.6	556.4	564.2	572.2	580.1	587.9
	Capacity (Btuh/1000)	44.8	49.9	55.3	61.1	67.2	73.8
	Unit Power (kW)	7.9	7.9	7.9	7.9	8.0	8.0

Note: Performance data calculated at 15°F subcooling and 15°F superheat and does not include capacity loss due to refrigerant lines.

Figure 7. TWA0724*A capacity curves

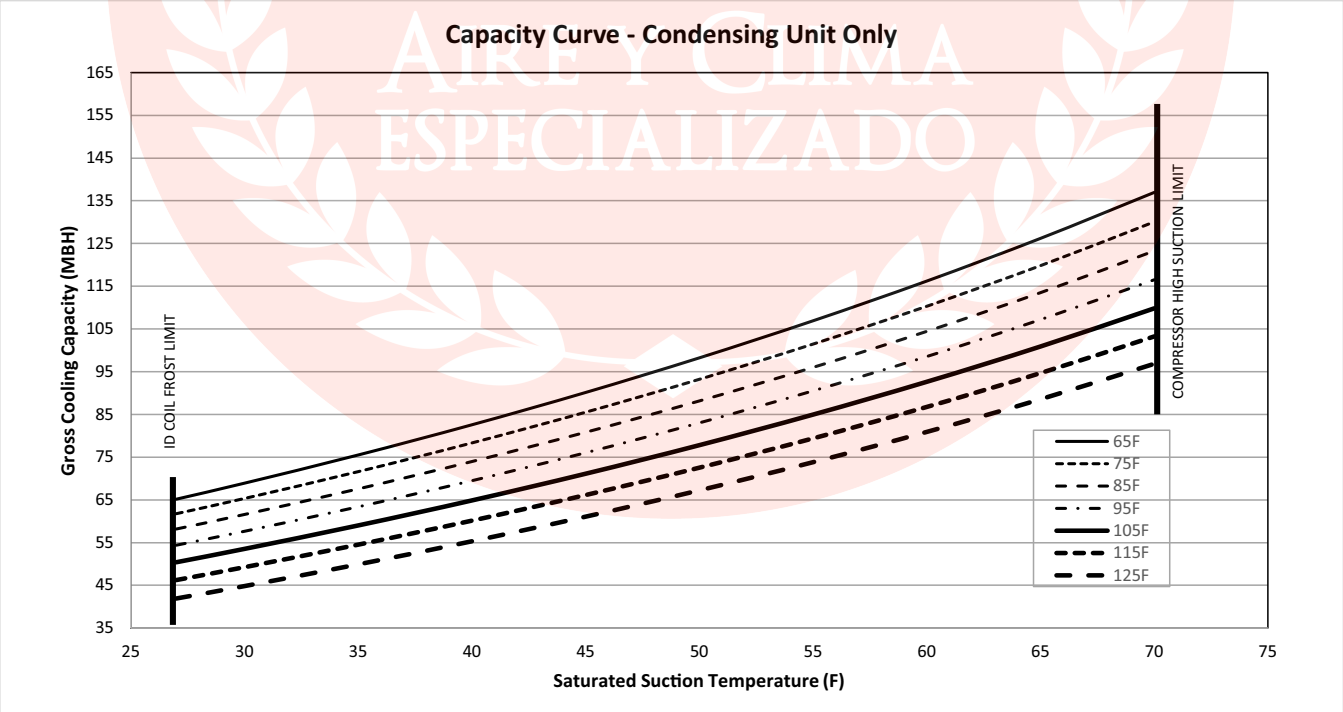

Table 20. Gross cooling capacities (MBH) 6 tons TWA0724*D condensing unit only (IP)

Outdoor Temp (°F)		Saturation Suction Temperature (°F)					
		30	35	40	45	50	55
65	Head Press (psig)	243.7	249.0	254.5	260.3	266.6	273.2
	Capacity (Btuh/1000)	65.0	71.5	78.3	85.6	93.3	101.4
	Unit Power (kW)	3.9	3.9	4.0	4.0	4.1	4.2
75	Head Press (psig)	280.4	286.0	291.8	297.9	304.6	311.5
	Capacity (Btuh/1000)	61.5	67.7	74.3	81.3	88.6	96.3
	Unit Power (kW)	4.4	4.4	4.5	4.5	4.6	4.7
85	Head Press (psig)	320.7	326.6	332.7	339.1	346.0	353.2
	Capacity (Btuh/1000)	57.8	63.8	70.1	76.8	83.8	91.1
	Unit Power (kW)	4.9	5.0	5.0	5.1	5.1	5.2
95	Head Press (psig)	364.6	370.8	377.2	383.9	391.0	398.4
	Capacity (Btuh/1000)	53.9	59.7	65.8	72.1	78.8	85.9
	Unit Power (kW)	5.5	5.6	5.6	5.7	5.7	5.8
105	Head Press (psig)	412.3	418.8	425.5	432.4	439.8	447.3
	Capacity (Btuh/1000)	49.9	55.4	61.2	67.4	73.8	80.5
	Unit Power (kW)	6.2	6.3	6.3	6.3	6.4	6.5
115	Head Press (psig)	464.2	470.9	477.8	484.9	492.3	499.9
	Capacity (Btuh/1000)	45.6	51.0	56.6	62.4	68.6	75.0
	Unit Power (kW)	7.0	7.0	7.1	7.1	7.1	7.2
125	Head Press (psig)	520.3	527.1	534.1	541.1	548.2	555.6
	Capacity (Btuh/1000)	41.3	46.4	51.8	57.4	63.3	69.5
	Unit Power (kW)	7.8	7.9	7.9	7.9	8.0	8.0

Note: Performance data calculated at 15°F subcooling and 15°F superheat and does not include capacity loss due to refrigerant lines.

Figure 8. TWA0724*D capacity curves

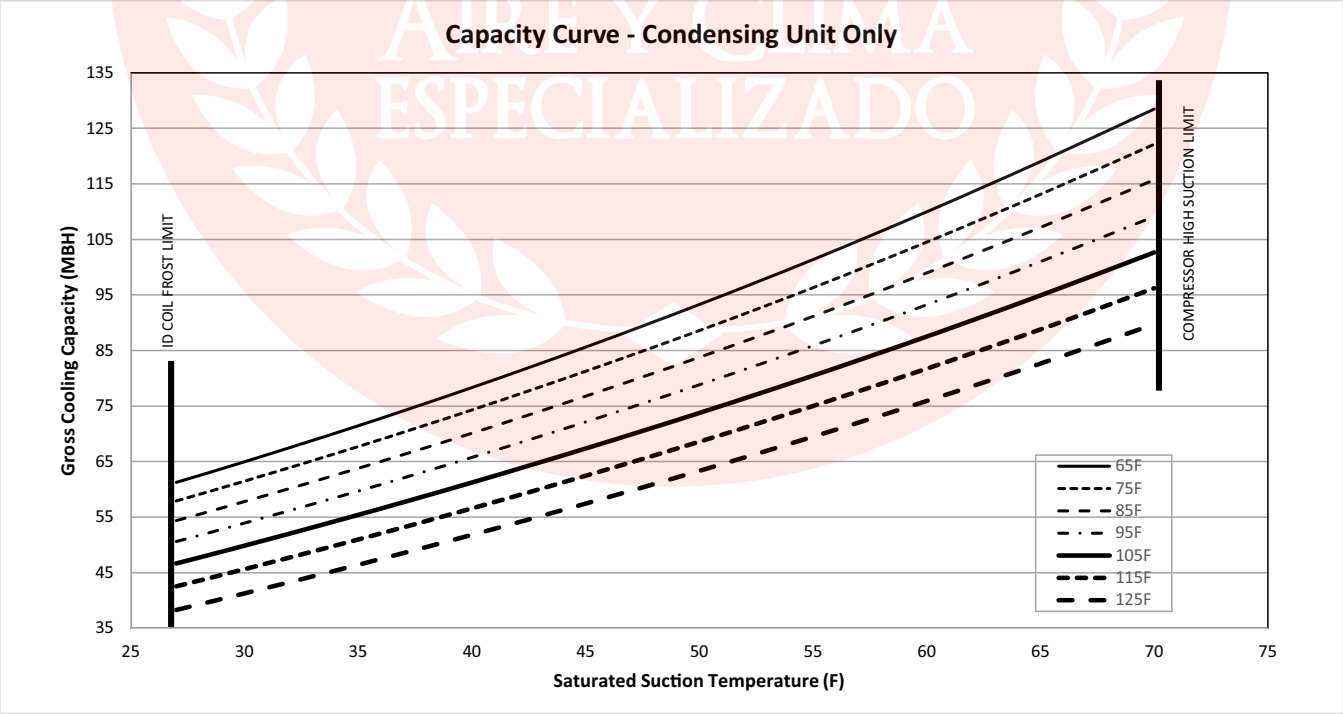

AIRE Y CLIMA ESPECIALIZADO

Table 21. Gross cooling capacities (MBH) 7.5 tons TWA0904*A condensing unit only (IP)

Outdoor Temp (°F)		Saturation Suction Temperature (°F)					
		30	35	40	45	50	55
65	Head Press (psig)	267.7	274.9	282.4	290.4	298.7	307.4
	Capacity (Btuh/1000)	82.1	90.1	98.6	107.8	117.7	128.2
	Unit Power (kW)	5.6	5.7	5.9	6.0	6.1	6.3
75	Head Press (psig)	306.1	313.5	321.3	329.5	338.0	346.8
	Capacity (Btuh/1000)	78.0	85.6	93.6	102.3	111.6	121.6
	Unit Power (kW)	6.2	6.3	6.4	6.6	6.7	6.9
85	Head Press (psig)	348.0	355.6	363.5	371.8	380.4	389.3
	Capacity (Btuh/1000)	73.8	80.9	88.5	96.7	105.4	114.8
	Unit Power (kW)	6.9	7.0	7.1	7.2	7.4	7.5
95	Head Press (psig)	393.5	401.1	409.1	417.4	426.1	435.0
	Capacity (Btuh/1000)	69.4	76.1	83.2	90.8	99.0	107.9
	Unit Power (kW)	7.6	7.8	7.9	8.0	8.1	8.3
105	Head Press (psig)	442.6	450.3	458.3	466.5	475.1	483.9
	Capacity (Btuh/1000)	64.9	71.1	77.7	84.9	92.5	100.8
	Unit Power (kW)	8.5	8.6	8.7	8.8	9.0	9.1
115	Head Press (psig)	495.5	502.9	510.7	518.8	527.0	535.5
	Capacity (Btuh/1000)	60.2	65.9	72.1	78.8	85.9	93.6
	Unit Power (kW)	9.4	9.5	9.6	9.7	9.9	10.0
125	Head Press (psig)	551.6	558.7	566.0	573.5	581.1	588.8
	Capacity (Btuh/1000)	55.4	60.7	66.4	72.6	79.3	86.5
	Unit Power (kW)	10.4	10.5	10.6	10.7	10.8	10.9

Note: Performance data calculated at 15°F subcooling and 15°F superheat and does not include capacity loss due to refrigerant lines.

Figure 9. TWA0904*A capacity curves

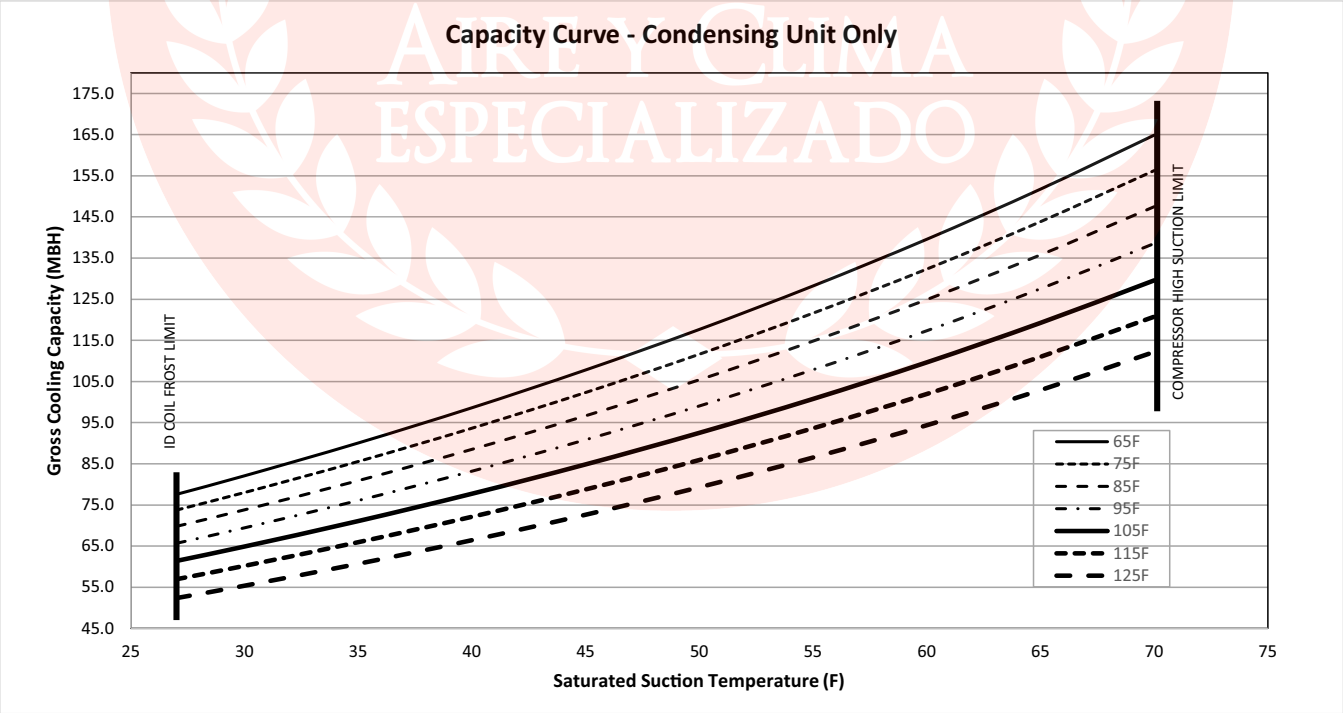

Table 22. Gross cooling capacities (MBH) 7.5 tons TWA0904*D condensing unit only (IP)

Outdoor Temp (°F)		Saturation Suction Temperature (°F)					
		30	35	40	45	50	55
65	Head Press (psig)	250.8	256.7	262.9	269.7	276.6	284.1
	Capacity (Btuh/1000)	79.9	88.0	96.5	105.6	115.4	125.7
	Unit Power (kW)	4.8	4.9	4.9	5.0	5.0	5.1
75	Head Press (psig)	287.9	294.1	300.5	307.6	314.6	321.8
	Capacity (Btuh/1000)	75.8	83.5	91.6	100.2	109.5	119.3
	Unit Power (kW)	5.4	5.4	5.5	5.5	5.6	5.6
85	Head Press (psig)	328.4	334.7	341.5	348.8	356.6	363.2
	Capacity (Btuh/1000)	71.5	78.8	86.5	94.7	103.3	112.8
	Unit Power (kW)	6.0	6.1	6.1	6.2	6.2	6.3
95	Head Press (psig)	372.4	379.0	386.0	393.4	401.5	409.7
	Capacity (Btuh/1000)	66.9	73.8	81.1	88.9	97.1	105.9
	Unit Power (kW)	6.8	6.8	6.8	6.9	6.9	7.0
105	Head Press (psig)	420.2	426.9	434.1	441.7	449.8	458.0
	Capacity (Btuh/1000)	62.1	68.7	75.7	83.1	90.9	99.2
	Unit Power (kW)	7.6	7.6	7.7	7.7	7.7	7.8
115	Head Press (psig)	471.9	478.7	486.0	493.5	501.5	507.7
	Capacity (Btuh/1000)	57.2	63.5	70.1	77.1	84.6	92.7
	Unit Power (kW)	8.6	8.6	8.6	8.6	8.7	8.7
125	Head Press (psig)	527.5	534.3	541.1	548.4	555.8	562.0
	Capacity (Btuh/1000)	52.2	58.2	64.5	71.2	78.3	86.0
	Unit Power (kW)	9.7	9.7	9.7	9.7	9.7	9.7

Note: Performance data calculated at 15°F subcooling and 15°F superheat and does not include capacity loss due to refrigerant lines.

Figure 10. TWA0904*D capacity curves

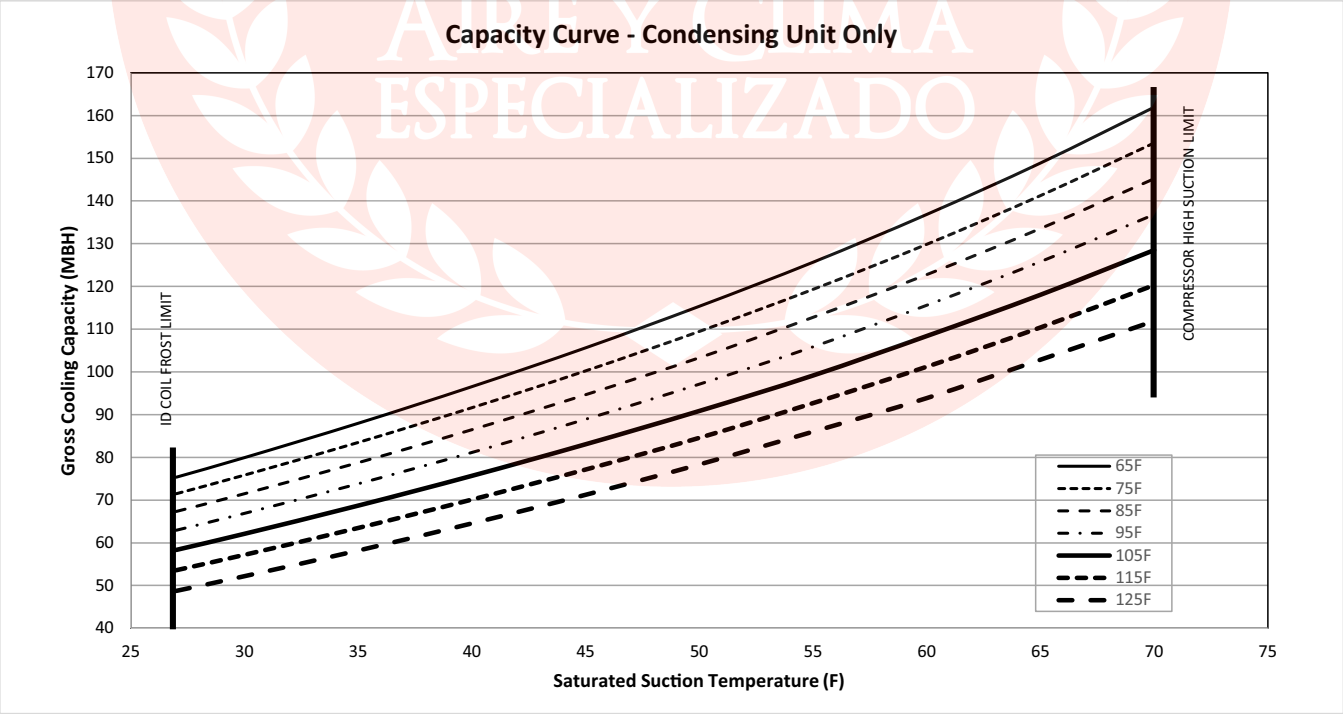

Table 23. Gross cooling capacities (MBH) 10 tons TWA1204*A condensing unit only (IP)

Outdoor Temp (°F)		Saturation Suction Temperature (°F)					
		30	35	40	45	50	55
65	Head Press (psig)	257.6	263.9	270.5	277.6	285.0	292.9
	Capacity (Btuh/1000)	106.7	117.0	128.0	139.9	152.7	166.5
	Unit Power (kW)	7.0	7.1	7.3	7.5	7.8	8.0
75	Head Press (psig)	295.1	301.6	308.5	315.8	323.5	331.6
	Capacity (Btuh/1000)	101.6	111.4	122.0	133.4	145.7	159.0
	Unit Power (kW)	7.6	7.8	7.9	8.1	8.3	8.5
85	Head Press (psig)	336.1	342.9	350.0	357.6	365.5	373.7
	Capacity (Btuh/1000)	96.3	105.7	115.8	126.7	138.4	151.1
	Unit Power (kW)	8.3	8.5	8.6	8.8	9.0	9.2
95	Head Press (psig)	380.9	387.8	395.1	402.8	410.8	419.2
	Capacity (Btuh/1000)	90.8	99.7	109.3	119.6	130.8	142.8
	Unit Power (kW)	9.1	9.3	9.4	9.6	9.8	9.9
105	Head Press (psig)	429.5	436.6	444.0	451.8	459.8	468.2
	Capacity (Btuh/1000)	85.1	93.5	102.5	112.3	122.8	134.3
	Unit Power (kW)	10.0	10.2	10.3	10.5	10.7	10.8
115	Head Press (psig)	482.2	489.3	496.6	504.3	512.3	520.6
	Capacity (Btuh/1000)	79.2	87.0	95.5	104.7	114.7	125.5
	Unit Power (kW)	11.0	11.2	11.3	11.5	11.7	11.8
125	Head Press (psig)	538.7	545.5	552.7	560.0	567.7	575.5
	Capacity (Btuh/1000)	73.1	80.4	88.4	97.0	106.3	116.5
	Unit Power (kW)	12.1	12.3	12.4	12.6	12.8	12.9

Note: Performance data calculated at 15°F subcooling and 15°F superheat and does not include capacity loss due to refrigerant lines.

Figure 11. TWA1204*A capacity curves

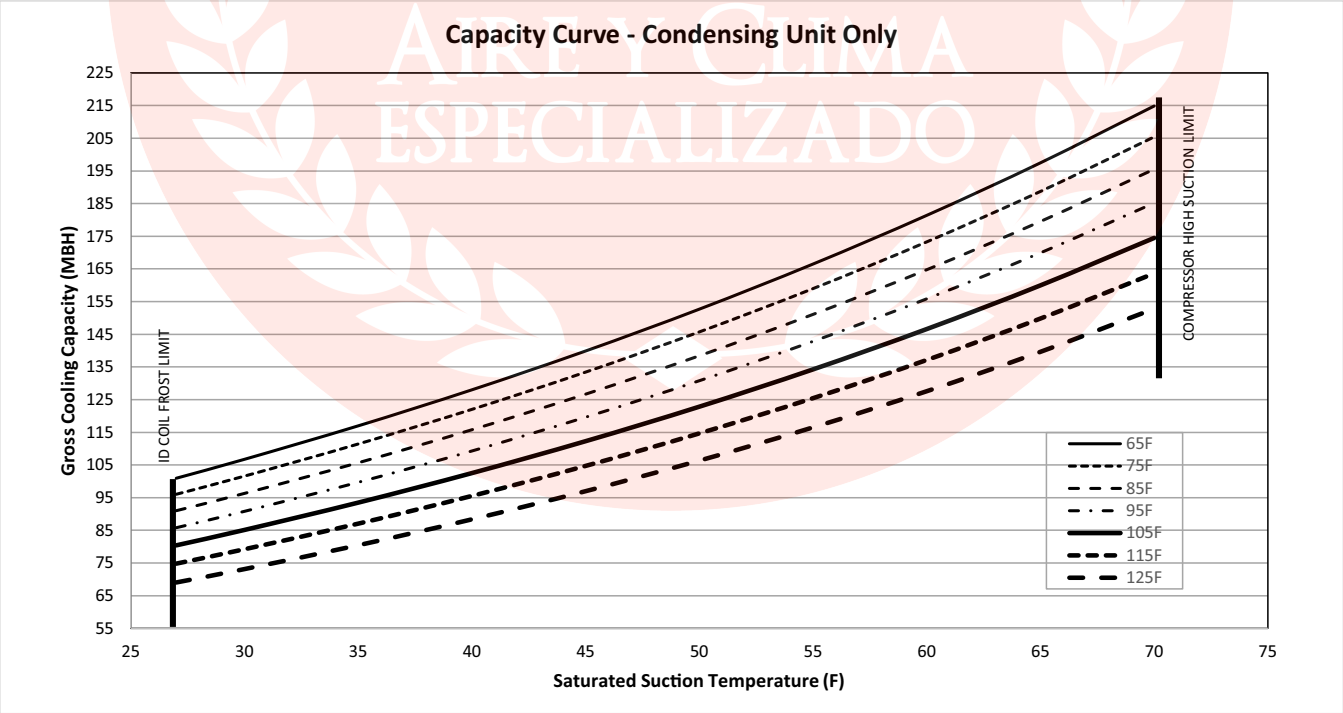

Table 24. Gross cooling capacities (MBH) 10 tons TWA1204*D condensing unit only (IP)

Outdoor Temp (°F)		Saturation Suction Temperature (°F)					
		30	35	40	45	50	55
65	Head Press (psig)	251.7	257.6	263.9	270.6	277.6	285.0
	Capacity (Btuh/1000)	106.3	117.0	128.5	140.9	154.3	168.7
	Unit Power (kW)	6.7	6.8	6.9	7.0	7.2	7.3
75	Head Press (psig)	289.1	295.3	301.8	308.7	316.0	323.6
	Capacity (Btuh/1000)	101.1	111.3	122.2	134.0	146.6	160.3
	Unit Power (kW)	7.4	7.5	7.6	7.7	7.9	8.0
85	Head Press (psig)	330.1	336.4	343.2	350.3	357.7	365.5
	Capacity (Btuh/1000)	95.6	105.2	115.6	126.7	138.7	151.7
	Unit Power (kW)	8.2	8.3	8.4	8.5	8.6	8.8
95	Head Press (psig)	374.7	381.3	388.2	395.5	403.1	410.9
	Capacity (Btuh/1000)	89.7	98.9	108.7	119.2	130.6	142.9
	Unit Power (kW)	9.0	9.1	9.2	9.4	9.5	9.7
105	Head Press (psig)	423.2	430.0	437.1	444.5	452.2	460.1
	Capacity (Btuh/1000)	83.7	92.3	101.6	111.6	122.4	134.0
	Unit Power (kW)	10.0	10.1	10.2	10.4	10.5	10.6
115	Head Press (psig)	476.1	482.9	490.1	497.5	505.1	513.0
	Capacity (Btuh/1000)	77.5	85.7	94.5	103.9	114.1	125.1
	Unit Power (kW)	11.2	11.3	11.4	11.5	11.6	11.7
125	Head Press (psig)	533.2	539.9	546.8	554.0	561.4	568.9
	Capacity (Btuh/1000)	71.3	79.0	87.3	96.3	105.9	116.3
	Unit Power (kW)	12.5	12.6	12.7	12.8	12.9	13.0

Note: Performance data calculated at 15°F subcooling and 15°F superheat and does not include capacity loss due to refrigerant lines.

Figure 12. TWA1204*D capacity curves

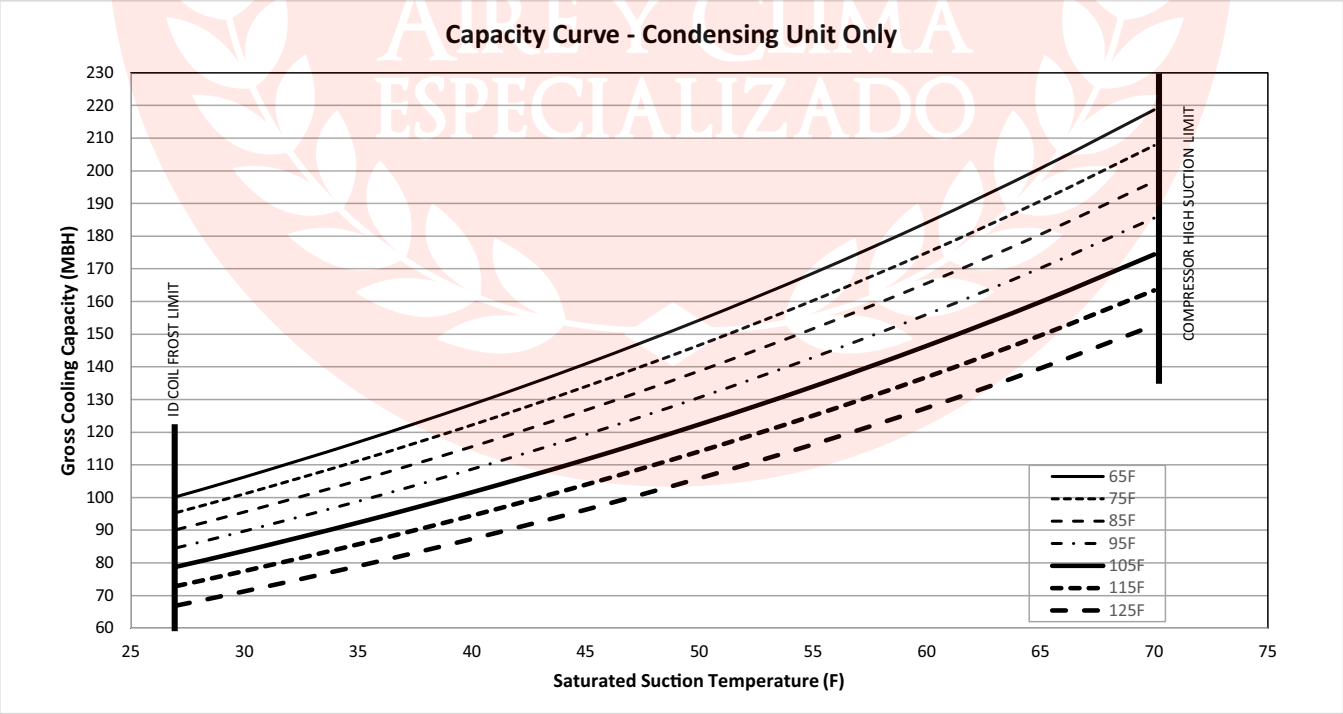

Table 25. Gross cooling capacities (MBH) 15 tons TWA1804*D condensing unit only (IP)

Outdoor Temp (°F)		Saturation Suction Temperature (°F)					
		30	35	40	45	50	55
65	Head Press (psig)	249.3	254.3	259.5	265.0	270.8	276.9
	Capacity (Btuh/1000)	173.6	189.5	206.7	225.4	245.7	267.7
	Unit Power (kW)	11.7	12.0	12.2	12.5	12.8	13.1
75	Head Press (psig)	286.7	292.0	297.5	303.3	309.3	315.7
	Capacity (Btuh/1000)	165.4	180.7	197.2	215.2	234.7	255.9
	Unit Power (kW)	12.8	13.0	13.2	13.5	13.8	14.1
85	Head Press (psig)	327.7	333.2	338.9	345.0	351.3	357.9
	Capacity (Btuh/1000)	156.5	171.2	187.1	204.3	223.1	243.4
	Unit Power (kW)	14.0	14.2	14.4	14.7	14.9	15.2
95	Head Press (psig)	372.4	378.1	384.1	390.4	396.9	403.7
	Capacity (Btuh/1000)	147.2	161.2	176.5	193.0	210.9	230.4
	Unit Power (kW)	15.3	15.5	15.7	16.0	16.2	16.5
105	Head Press (psig)	421.2	427.1	433.3	439.7	446.4	453.3
	Capacity (Btuh/1000)	137.6	151.0	165.5	181.2	198.3	217.0
	Unit Power (kW)	16.8	17.0	17.2	17.5	17.7	18.0
115	Head Press (psig)	474.4	480.4	486.7	493.2	499.9	506.8
	Capacity (Btuh/1000)	127.8	140.5	154.3	169.3	185.6	203.4
	Unit Power (kW)	18.5	18.7	18.9	19.2	19.4	19.7
125	Head Press (psig)	532.3	538.2	544.4	550.8	557.3	563.9
	Capacity (Btuh/1000)	118.0	130.0	143.2	157.4	173.0	189.9
	Unit Power (kW)	20.5	20.7	20.9	21.1	21.3	21.5

Note: Performance data calculated at 15°F subcooling and 15°F superheat and does not include capacity loss due to refrigerant lines.

Figure 13. TWA1804*D capacity curves

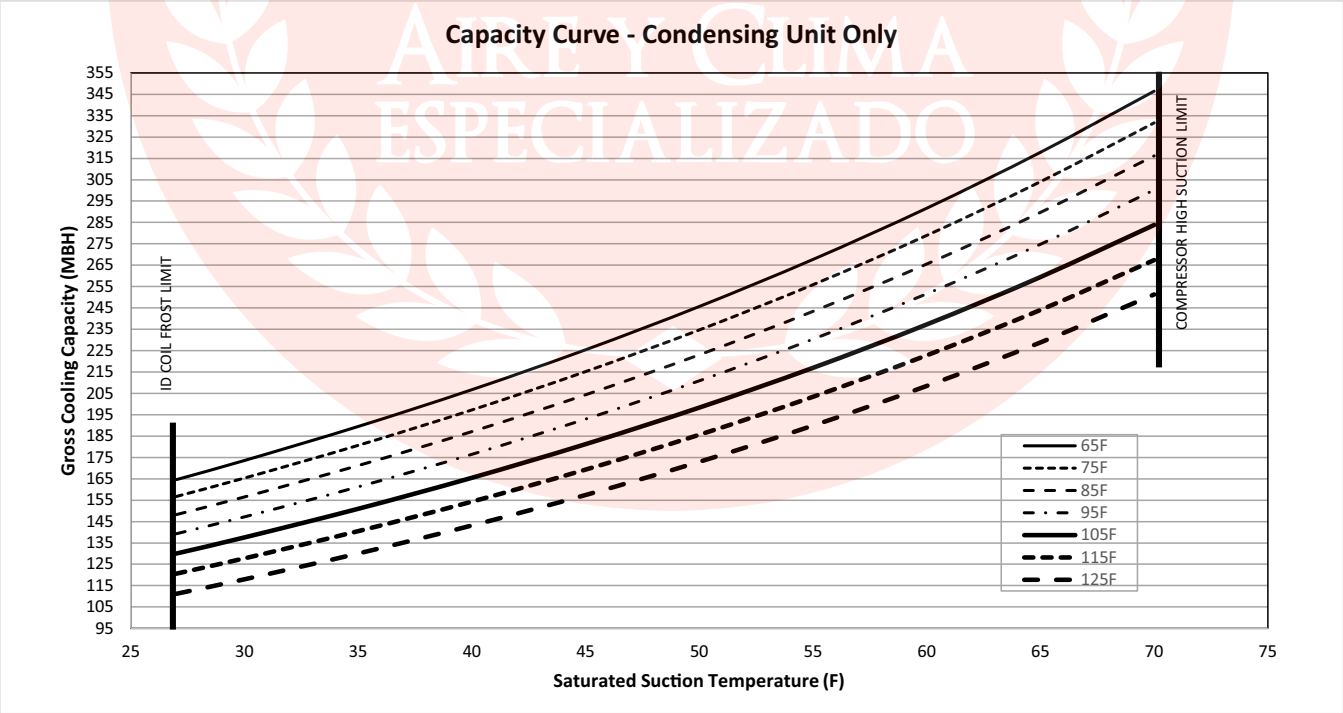

Table 26. Gross cooling capacities (MBH) 20 tons TWA2404*D condensing unit only (IP)

Outdoor Temp (°F)		Saturation Suction Temperature (°F)					
		30	35	40	45	50	55
65	Head Press (psig)	264.2	271.1	278.6	286.4	294.8	303.7
	Capacity (Btuh/1000)	247.9	271.9	297.6	325.1	354.6	386.3
	Unit Power (kW)	15.5	15.9	16.3	16.7	17.2	17.7
75	Head Press (psig)	301.9	309.2	316.8	325.0	333.6	342.8
	Capacity (Btuh/1000)	236.1	258.9	283.4	309.5	337.6	367.6
	Unit Power (kW)	16.9	17.2	17.7	18.1	18.6	19.1
85	Head Press (psig)	343.0	350.5	358.5	366.8	375.7	385.2
	Capacity (Btuh/1000)	223.8	245.4	268.6	293.5	320.1	348.5
	Unit Power (kW)	18.5	18.8	19.2	19.7	20.1	20.6
95	Head Press (psig)	387.6	395.3	403.5	412.0	421.1	430.8
	Capacity (Btuh/1000)	210.6	231.2	253.2	276.8	302.0	328.9
	Unit Power (kW)	20.2	20.6	21.0	21.4	21.9	22.4
105	Head Press (psig)	435.7	443.6	451.9	460.6	470.0	479.8
	Capacity (Btuh/1000)	196.8	216.3	237.2	259.5	283.4	308.8
	Unit Power (kW)	22.2	22.6	23.0	23.4	23.9	24.4
115	Head Press (psig)	487.4	495.4	503.8	512.5	521.8	531.5
	Capacity (Btuh/1000)	182.3	200.9	220.7	241.9	264.4	288.6
	Unit Power (kW)	24.5	24.8	25.2	25.7	26.1	26.6
125	Head Press (psig)	542.4	550.3	558.5	567.0	575.8	585.1
	Capacity (Btuh/1000)	167.4	185.0	203.8	223.9	245.5	268.5
	Unit Power (kW)	26.9	27.3	27.6	28.1	28.5	28.9

Note: Performance data calculated at 15°F subcooling and 15°F superheat and does not include capacity loss due to refrigerant lines.

Figure 14. TWA2404*D capacity curves

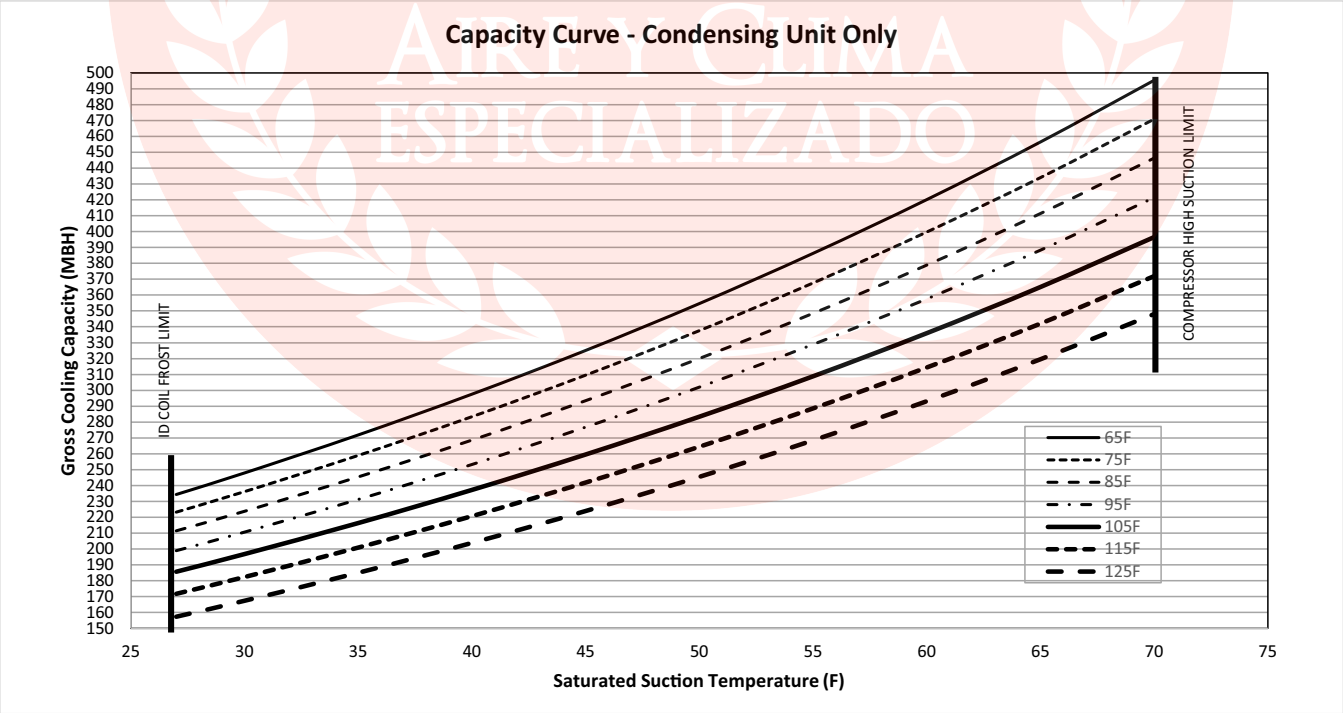

Gross Heating Capacities

Table 27. Gross heating capacities (MBH) 6 tons TWA0724*A heat pump with 7.5 tons TWE0904*A air handler at 2100 CFM (IP)

Outdoor Temp (°F)	Integrated Heating Capacity (MBH) at Indicated Indoor Dry Bulb Temp (°F)				Total Power (kW) at Indicated Indoor Dry Bulb Temp (°F)			
	60	70	75	80	60	70	75	80
-8	28.4	28.1	27.8	27.6	4.7	5.0	5.3	5.5
-3	31.4	31.1	30.8	30.5	4.7	5.1	5.3	5.6
2	34.9	34.2	33.9	33.5	4.7	5.2	5.4	5.6
7	38.1	37.4	37.0	36.6	4.8	5.2	5.4	5.7
12	41.0	40.1	39.6	39.2	4.8	5.3	5.5	5.8
17	44.4	43.3	42.8	42.3	4.9	5.3	5.6	5.8
22	48.0	46.9	46.3	45.8	5.0	5.4	5.6	5.9
27	51.9	50.5	49.8	49.1	5.0	5.5	5.7	6.0
32	55.8	54.2	53.4	52.6	5.1	5.5	5.8	6.1
37	59.6	57.8	56.9	56.1	5.2	5.6	5.9	6.1
42	63.6	61.5	60.5	59.5	5.2	5.7	5.9	6.2
47	68.1	65.3	64.2	63.0	5.3	5.8	6.0	6.3
52	72.5	69.3	68.7	67.4	5.4	5.9	6.1	6.4
57	76.9	74.0	72.6	71.2	5.5	6.0	6.2	6.5
62	81.2	78.0	76.4	74.7	5.6	6.0	6.3	6.6
67	85.7	81.7	79.8	77.9	5.7	6.1	6.4	6.6
72	90.1	85.7	83.4	81.2	5.8	6.2	6.4	6.7

Notes:

1. Net heating capacity and power include indoor fan heat at AHRI ESP. To obtain net heating at other conditions, subtract fan heat at this condition and add fan heat at new condition.
2. Integrated heating capacities and power include the effects of defrost in the frost region. All heating capacities and power are at 70% outdoor relative humidity and demand defrost cycle.

Table 28. Gross heating capacities (MBH) 6 tons TWA0724*D heat pump with 6 tons TWE0724*B air handler at 2400 CFM (IP)

Outdoor Temp (°F)	Integrated Heating Capacity (MBH) at Indicated Indoor Dry Bulb Temp (°F)				Total Power (kW) at Indicated Indoor Dry Bulb Temp (°F)			
	60	70	75	80	60	70	75	80
-8	21.1	19.1	18.2	17.3	4.2	4.7	4.9	5.2
-3	24.1	22.4	21.7	20.9	4.3	4.8	5.1	5.3
2	27.4	26.0	25.3	24.5	4.4	4.9	5.2	5.5
7	31.1	29.7	29.0	28.2	4.5	5.0	5.3	5.6
12	34.9	33.5	32.7	32.0	4.6	5.1	5.4	5.7
17	38.9	37.4	36.7	35.9	4.7	5.2	5.5	5.8
22	43.1	41.5	40.7	39.9	4.8	5.3	5.6	5.9
27	47.4	45.7	44.9	44.1	4.9	5.4	5.7	6.0
32	51.9	50.1	49.2	48.4	4.9	5.5	5.8	6.1
37	56.5	54.5	53.6	52.6	5.0	5.5	5.8	6.1
42	61.1	59.0	58.0	57.0	5.1	5.6	5.9	6.2
47	65.9	64.0	62.6	61.6	5.1	5.6	6.0	6.3
52	71.3	69.0	67.9	66.7	5.2	5.8	6.1	6.4
57	76.7	74.1	72.8	71.4	5.3	5.8	6.1	6.5
62	81.8	79.0	77.6	76.2	5.4	6.0	6.3	6.6
67	87.3	84.2	82.7	81.2	5.5	6.1	6.4	6.7
72	93.1	89.8	88.1	86.5	5.6	6.2	6.5	6.9

Notes:

1. Net heating capacity and power include indoor fan heat at AHRI ESP. To obtain net heating at other conditions, subtract fan heat at this condition and add fan heat at new condition.
2. Integrated heating capacities and power include the effects of defrost in the frost region. All heating capacities and power are at 70% outdoor relative humidity and demand defrost cycle.

Table 29. Gross heating capacities (MBH) 7.5 tons TWA0904*A heat pump with 7.5 tons TWE0904*A air handler at 2625 CFM (IP)

Outdoor Temp (°F)	Integrated Heating Capacity (MBH) at Indicated Indoor Dry Bulb Temp (°F)				Total Power (kW) at Indicated Indoor Dry Bulb Temp (°F)			
	60	70	75	80	60	70	75	80
-8	34.2	34.4	34.6	34.8	5.2	5.7	6.0	6.3
-3	38.1	38.0	38.1	38.2	5.3	5.8	6.1	6.5
2	41.9	41.6	41.6	41.7	5.4	5.9	6.3	6.6
7	45.0	44.7	44.7	44.7	5.5	6.1	6.4	6.7
12	49.0	48.5	48.4	48.3	5.6	6.2	6.5	6.8
17	53.1	52.4	52.1	52.0	5.7	6.3	6.6	7.0
22	57.4	56.6	56.3	56.0	5.8	6.4	6.7	7.1
27	62.1	61.1	60.5	60.1	5.9	6.5	6.9	7.2
32	66.8	65.5	64.9	64.3	6.0	6.7	7.0	7.4
37	71.6	69.9	69.2	68.4	6.2	6.8	7.1	7.5
42	76.4	74.4	73.5	72.6	6.3	6.9	7.2	7.6
47	81.9	79.6	78.5	77.0	6.4	7.1	7.4	7.7
52	87.3	84.7	83.4	82.1	6.6	7.2	7.5	7.9
57	92.8	89.7	88.2	86.7	6.7	7.3	7.7	8.0
62	98.3	94.8	93.0	91.2	6.9	7.5	7.8	8.2
67	103.9	99.5	97.5	95.4	7.0	7.6	8.0	8.3
72	109.6	104.6	102.1	99.5	7.2	7.8	8.1	8.4

Notes:

1. Net heating capacity and power include indoor fan heat at AHRI ESP. To obtain net heating at other conditions, subtract fan heat at this condition and add fan heat at new condition.
2. Integrated heating capacities and power include the effects of defrost in the frost region. All heating capacities and power are at 70% outdoor relative humidity and demand defrost cycle.

Table 30. Gross heating capacities (MBH) 7.5 tons TWA0904*D heat pump with 7.5 tons TWE0904*B air handler at 3000 CFM (IP)

Outdoor Temp (°F)	Integrated Heating Capacity (MBH) at Indicated Indoor Dry Bulb Temp (°F)				Total Power (kW) at Indicated Indoor Dry Bulb Temp (°F)			
	60	70	75	80	60	70	75	80
-8	29.1	28.6	28.2	27.8	5.8	6.5	6.9	7.3
-3	33.0	32.4	32.0	31.6	5.8	6.5	6.9	7.3
2	37.0	36.3	35.9	35.5	5.9	6.5	6.9	7.3
7	41.1	40.4	39.9	39.5	5.9	6.6	7.0	7.4
12	45.5	44.6	44.1	43.6	6.0	6.6	7.0	7.4
17	50.1	49.1	48.5	47.9	6.0	6.7	7.1	7.4
22	54.9	53.7	53.1	52.4	6.1	6.7	7.1	7.5
27	60.0	58.6	57.8	57.1	6.1	6.8	7.2	7.6
32	65.3	63.6	62.8	62.0	6.2	6.9	7.2	7.6
37	70.6	68.7	67.8	66.8	6.3	6.9	7.3	7.7
42	76.0	73.9	72.8	71.7	6.3	7.0	7.3	7.7
47	81.6	79.1	77.9	76.7	6.4	7.1	7.4	7.8
52	87.5	84.6	83.3	81.9	6.4	7.1	7.5	7.9
57	93.4	90.4	88.9	87.4	6.6	7.2	7.6	8.0
62	99.5	96.1	94.4	92.8	6.7	7.3	7.7	8.0
67	105.9	102.0	100.1	98.2	6.8	7.4	7.8	8.1
72	112.2	107.8	105.6	103.4	6.8	7.5	7.8	8.2

Notes:

1. Net heating capacity and power include indoor fan heat at AHRI ESP. To obtain net heating at other conditions, subtract fan heat at this condition and add fan heat at new condition.
2. Integrated heating capacities and power include the effects of defrost in the frost region. All heating capacities and power are at 70% outdoor relative humidity and demand defrost cycle.

AIRE Y CLIMA ESPECIALIZADO

Table 31. Gross heating capacities (MBH)10 tons TWA1204*A heat pump with 10 tons TWE1204*A air handler at 4000 CFM (IP)

Outdoor Temp (°F)	Integrated Heating Capacity (MBH) at Indicated Indoor Dry Bulb Temp (°F)				Total Power (kW) at Indicated Indoor Dry Bulb Temp (°F)			
	60	70	75	80	60	70	75	80
-8	43.3	42.7	42.5	42.3	7.6	8.2	8.5	8.9
-3	48.7	47.9	47.6	47.5	7.7	8.3	8.6	9.0
2	54.2	53.3	53.0	52.6	7.7	8.4	8.7	9.1
7	59.9	58.8	58.3	57.9	7.8	8.5	8.9	9.2
12	65.2	64.0	63.4	62.9	7.9	8.6	9.0	9.4
17	71.0	69.6	68.9	68.3	8.0	8.7	9.1	9.5
22	77.1	75.5	74.7	73.9	8.2	8.9	9.3	9.7
27	83.5	81.6	80.7	79.8	8.3	9.0	9.4	9.8
32	90.3	88.1	87.0	86.0	8.5	9.2	9.6	10.0
37	97.0	94.5	93.3	92.1	8.6	9.4	9.8	10.2
42	103.9	101.1	99.8	98.4	8.8	9.5	9.9	10.4
47	111.3	108.2	106.6	105.1	9.0	9.7	10.1	10.6
52	118.9	115.4	113.7	112.0	9.2	9.9	10.3	10.8
57	126.7	122.9	120.9	119.0	9.4	10.1	10.5	11.0
62	134.9	130.7	128.6	126.5	9.6	10.4	10.8	11.2
67	143.1	138.3	135.9	133.5	9.9	10.6	11.0	11.4
72	151.5	146.0	143.4	140.6	10.1	10.8	11.2	11.6

Notes:

1. Net heating capacity and power include indoor fan heat at AHRI ESP. To obtain net heating at other conditions, subtract fan heat at this condition and add fan heat at new condition.
2. Integrated heating capacities and power include the effects of defrost in the frost region. All heating capacities and power are at 70% outdoor relative humidity and demand defrost cycle.

Table 32. Gross heating capacities (MBH)10 tons TWA1204*D heat pump with 10 tons TWE1204*B air handler at 4000 CFM (IP)

Outdoor Temp (°F)	Integrated Heating Capacity (MBH) at Indicated Indoor Dry Bulb Temp (°F)				Total Power (kW) at Indicated Indoor Dry Bulb Temp (°F)			
	60	70	75	80	60	70	75	80
-8	42.6	41.7	41.1	40.6	7.6	8.2	8.6	9.0
-3	47.6	46.6	46.0	45.3	7.7	8.3	8.7	9.1
2	52.7	51.6	50.9	50.3	7.7	8.4	8.8	9.2
7	58.2	56.7	56.0	55.2	7.8	8.5	8.9	9.3
12	63.6	62.1	61.3	60.5	7.9	8.6	9.0	9.4
17	69.1	67.5	66.4	65.6	8.0	8.7	9.1	9.5
22	74.9	73.0	72.0	71.0	8.1	8.8	9.2	9.6
27	81.1	78.9	77.7	76.6	8.2	8.9	9.3	9.7
32	87.6	85.1	83.8	82.6	8.3	9.0	9.4	9.9
37	94.2	91.4	90.0	88.5	8.4	9.1	9.5	10.0
42	100.9	97.8	96.2	94.6	8.5	9.3	9.7	10.1
47	108.0	104.5	102.8	101.1	8.6	9.4	9.8	10.2
52	115.7	111.9	110.0	108.0	8.8	9.5	10.0	10.4
57	124.0	119.8	117.6	115.1	8.9	9.7	10.1	10.6
62	131.9	127.7	125.3	122.9	9.1	9.9	10.3	10.8
67	139.9	134.5	131.7	129.0	9.3	10.0	10.5	10.9
72	148.2	141.9	138.8	135.6	9.5	10.2	10.6	11.1

Notes:

1. Net heating capacity and power include indoor fan heat at AHRI ESP. To obtain net heating at other conditions, subtract fan heat at this condition and add fan heat at new condition.
2. Integrated heating capacities and power include the effects of defrost in the frost region. All heating capacities and power are at 70% outdoor relative humidity and demand defrost cycle.

Table 33. Gross heating capacities (MBH) 15 tons TWA1804*D heat pump with 15 tons TWE1804*B air handler at 6000 CFM (IP)

Outdoor Temp (°F)	Integrated Heating Capacity (MBH) at Indicated Indoor Dry Bulb Temp (°F)				Total Power (kW) at Indicated Indoor Dry Bulb Temp (°F)			
	60	70	75	80	60	70	75	80
-8	72.5	71.4	70.8	70.3	12.6	13.7	14.3	15.0
-3	81.4	80.0	79.3	78.6	12.8	13.9	14.6	15.2
2	90.3	88.7	88.0	87.0	13.0	14.2	14.8	15.5
7	99.9	97.9	96.8	95.8	13.2	14.4	15.0	15.7
12	109.5	107.1	105.9	104.8	13.4	14.6	15.3	16.0
17	119.3	116.6	114.4	113.7	13.7	14.9	15.5	16.2
22	129.0	126.0	124.5	123.0	13.9	15.1	15.8	16.5
27	138.8	135.5	133.8	132.2	14.2	15.4	16.0	16.7
32	149.5	145.9	144.1	142.3	14.4	15.6	16.3	17.0
37	160.6	156.3	154.4	152.4	14.6	15.9	16.5	17.2
42	171.6	167.0	164.8	163.0	14.9	16.1	16.8	17.5
47	183.1	178.3	175.8	173.2	15.2	16.4	17.1	17.8
52	195.3	189.8	187.1	184.5	15.5	16.7	17.4	18.1
57	207.5	201.6	198.6	195.8	15.8	17.0	17.7	18.4
62	220.0	213.4	210.2	207.1	16.1	17.4	18.0	18.8
67	233.1	225.8	222.2	218.7	16.5	17.8	18.4	19.1
72	247.9	239.8	235.8	231.9	17.0	18.2	18.9	19.6

Notes:

1. Net heating capacity and power include indoor fan heat at AHRI ESP. To obtain net heating at other conditions, subtract fan heat at this condition and add fan heat at new condition.
2. Integrated heating capacities and power include the effects of defrost in the frost region. All heating capacities and power are at 70% outdoor relative humidity and demand defrost cycle.

Table 34. Gross heating capacities (MBH) 20 tons TWA2404*D heat pump with 20 tons TWE2404*B air handler at 8000 CFM (IP)

Outdoor Temp (°F)	Integrated Heating Capacity (MBH) at Indicated Indoor Dry Bulb Temp (°F)				Total Power (kW) at Indicated Indoor Dry Bulb Temp (°F)			
	60	70	75	80	60	70	75	80
-8	85.7	83.2	82.6	81.8	15.8	17.2	17.9	18.7
-3	94.7	92.9	92.0	91.1	16.1	17.5	18.2	19.0
2	105.4	103.2	102.2	102.7	16.3	17.7	18.5	19.3
7	116.7	114.2	112.9	111.6	16.6	18.0	18.8	19.6
12	128.8	125.9	123.8	122.3	16.9	18.4	19.1	20.0
17	140.9	137.4	135.7	133.9	17.2	18.7	19.5	20.3
22	154.1	150.1	148.1	146.1	17.5	19.0	19.8	20.7
27	168.1	162.7	160.4	157.9	17.9	19.4	20.2	21.0
32	181.5	176.1	173.4	170.7	18.2	19.7	20.6	21.4
37	195.6	189.5	186.4	183.4	18.6	20.1	20.9	21.8
42	210.3	203.1	199.7	196.2	19.0	20.5	21.3	22.2
47	225.4	217.6	213.8	210.0	19.4	20.9	21.8	22.7
52	242.0	233.3	229.0	224.7	19.9	21.4	22.3	23.1
57	258.8	249.2	244.4	239.7	20.4	21.9	22.8	23.6
62	276.3	265.4	260.1	254.9	20.9	22.4	23.3	24.2
67	297.8	290.2	284.7	279.4	21.5	23.2	24.1	25.0
72	320.1	307.9	301.9	295.9	22.3	23.9	24.7	25.7

Notes:

1. Net heating capacity and power include indoor fan heat at AHRI ESP. To obtain net heating at other conditions, subtract fan heat at this condition and add fan heat at new condition.
2. Integrated heating capacities and power include the effects of defrost in the frost region. All heating capacities and power are at 70% outdoor relative humidity and demand defrost cycle.

AIRE Y CLIMA ESPECIALIZADO

Fan Performance

Important: *Additional external static pressure from accessories must be added to the design static pressure from the accessory pressure tables.*

Table 35. Evaporator fan performance —TWE060 — constant volume air handler

	External Static Pressure (Inches of Water Gauge)																					
	0.10"		0.20"		0.30"		0.40"		0.50"		0.60"		0.70"		0.80"		0.90"		1.00"		1.10"	
CFM	RPM	BHP	RPM	BHP	RPM	BHP	RPM	BHP	RPM	BHP	RPM	BHP	RPM	BHP	RPM	BHP	RPM	BHP	RPM	BHP	RPM	BHP
			3/4 HP Standard Motor																1.5 HP High Static Motor			
1600	—	—	738	0.33	790	0.38	840	0.44	888	0.50	936	0.56	980	0.62	1025	0.69	1070	0.76	1111	0.83	1152	0.91
1700	719	0.33	771	0.38	821	0.44	869	0.50	914	0.56	959	0.62	1003	0.68	1047	0.75	1089	0.82	1129	0.90	1170	0.98
1800	756	0.39	804	0.44	853	0.50	898	0.56	942	0.62	985	0.69	1028	0.75	1068	0.82	1109	0.89	1149	0.97	1187	1.05
1900	792	0.45	838	0.51	884	0.57	928	0.63	971	0.69	1012	0.76	1052	0.83	1092	0.90	1131	0.97	1170	1.05	1207	1.13
2000	829	0.52	873	0.58	917	0.64	959	0.71	1000	0.77	1040	0.84	1079	0.91	1117	0.98	1155	1.06	1192	1.14	1227	1.21
2100	866	0.60	908	0.66	950	0.72	991	0.79	1030	0.86	1069	0.93	1106	1.00	1144	1.08	1179	1.15	1215	1.23	1250	1.31
2200	903	0.68	944	0.74	983	0.81	1023	0.88	1061	0.95	1099	1.02	1134	1.10	1170	1.18	1206	1.26	1241	1.34	1274	1.42
2300	940	0.78	979	0.84	1017	0.90	1055	0.97	1093	1.05	1129	1.13	1164	1.21	1198	1.28	1232	1.37	1266	1.45	1299	1.53
2400	978	0.88	1015	0.94	1052	1.01	1089	1.08	1125	1.16	1160	1.24	1194	1.32	1227	1.40	1259	1.48	1292	1.57	—	—

	External Static Pressure (Inches of Water Gauge)					
	1.20"		1.30"		1.40"	
CFM	RPM	BHP	RPM	BHP	RPM	BHP
	1.5 HP High Static Motor					
1600	1191	0.99	1229	1.07	1264	1.14
1700	1208	1.06	1246	1.14	1281	1.22
1800	1226	1.13	1263	1.22	1300	1.30
1900	1245	1.21	1281	1.30	1317	1.39
2000	1265	1.30	1300	1.39	1335	1.48
2100	1285	1.39	1319	1.48	—	—
2200	1308	1.50	—	—	—	—
2300	—	—	—	—	—	—
2400	—	—	—	—	—	—

Notes:

1. Data includes pressure drop due to wet coil and 1" filter.
2. Fan motor heat (MBh) = 3.15 x BHP.
3. Check General Data for indoor fan motor HP availability.
4. Factory supplied motors, in commercial equipment, are definite purpose motors, specifically designed and tested to operate reliably and continuously at all cataloged conditions. Using the full horsepower range of our fan motors as shown in our tabular data will not result in nuisance tripping or premature motor failure. Our product's warranty will not be affected.

AIRE Y CLIMA ESPECIALIZADO

Table 36. Evaporator fan performance - TWE0724** - 2-speed VFD, SZVAV air handler

External Static Pressure (Inches of Water Gauge)

	0.10"			0.20"			0.30"			0.40"			0.50"			0.60"			0.70"			0.80"			0.90"			1.00"		
CFM	RPM	Hz	BHP	RPM	Hz	BHP	RPM	Hz	BHP	RPM	Hz	BHP	RPM	Hz	BHP	RPM	Hz	BHP	RPM	Hz	BHP	RPM	Hz	BHP	RPM	Hz	BHP	RPM	Hz	BHP
2 HP Standard Drive																														
1920	—	—	—	518	28	0.29	578	31	0.37	635	34	0.46	688	37	0.55	737	40	0.65	782	42	0.75	824	44	0.85	863	46	0.95	900	48	1.05
2040	474	25	0.26	536	29	0.33	592	32	0.41	648	35	0.50	700	38	0.60	748	40	0.70	793	43	0.80	835	45	0.91	874	47	1.02	911	49	1.12
2160	492	26	0.30	555	30	0.38	608	33	0.46	661	35	0.55	711	38	0.65	759	41	0.75	804	43	0.86	846	45	0.97	886	48	1.08	923	50	1.20
2280	512	27	0.34	574	31	0.43	625	34	0.51	675	36	0.60	724	39	0.70	771	41	0.81	815	44	0.92	857	46	1.03	896	48	1.15	934	50	1.27
2400	532	29	0.38	594	32	0.48	642	34	0.56	689	37	0.66	737	40	0.76	783	42	0.87	826	44	0.98	868	47	1.10	907	49	1.22	945	51	1.35
2520	553	30	0.43	614	33	0.54	661	35	0.63	705	38	0.72	751	40	0.82	795	43	0.94	838	45	1.05	879	47	1.18	918	49	1.30	955	51	1.43
2640	575	31	0.49	634	34	0.60	679	36	0.69	722	39	0.79	765	41	0.89	809	43	1.01	850	46	1.13	891	48	1.25	929	50	1.38	966	52	1.51
2760	597	32	0.55	651	35	0.66	698	37	0.76	740	40	0.86	780	42	0.96	822	44	1.08	863	46	1.21	903	48	1.33	941	51	1.46	978	52	1.60
2880	619	33	0.62	669	36	0.73	718	39	0.84	758	41	0.94	797	43	1.05	837	45	1.16	877	47	1.29	915	49	1.42	953	51	1.55	989	53	1.69

External Static Pressure (Inches of Water Gauge)

	1.10"			1.20"			1.30"			1.40"			1.50"			1.60"			1.70"			1.80"			1.90"			2.00"		
CFM	RPM	Hz	BHP	RPM	Hz	BHP	RPM	Hz	BHP	RPM	Hz	BHP	RPM	Hz	BHP	RPM	Hz	BHP	RPM	Hz	BHP	RPM	Hz	BHP	RPM	Hz	BHP	RPM	Hz	BHP
2 HP Standard Drive																						3 HP High Static Drive								
1920	934	50	1.15	967	52	1.25	998	54	1.36	1027	55	1.46	1056	57	1.56	1082	58	1.65	1108	59	1.75	1132	50	1.84	1156	51	1.94	1179	52	2.03
2040	946	51	1.23	979	53	1.34	1011	54	1.45	1041	56	1.55	1069	57	1.66	1097	59	1.77	1124	60	1.87	1148	51	1.98	1172	52	2.08	1195	53	2.18
2160	958	51	1.31	991	53	1.42	1023	55	1.54	1053	57	1.65	1082	58	1.77	1110	60	1.88	1137	50	1.99	1163	51	2.11	1188	53	2.22	1212	54	2.33
2280	969	52	1.39	1003	54	1.51	1035	56	1.63	1065	57	1.75	1095	59	1.87	1123	60	1.99	1150	51	2.11	1176	52	2.23	1202	53	2.35	1226	54	2.47
2400	980	53	1.47	1014	54	1.60	1046	56	1.72	1077	58	1.85	1107	59	1.98	1135	50	2.10	1163	51	2.23	1189	53	2.36	1215	54	2.48	1240	55	2.61
2520	991	53	1.56	1025	55	1.69	1057	57	1.82	1088	58	1.95	1118	60	2.08	1147	51	2.22	1175	52	2.35	1202	53	2.48	1227	54	2.61	1252	55	2.75
2640	1002	54	1.64	1036	56	1.78	1068	57	1.92	1099	59	2.05	1130	50	2.19	1158	51	2.33	1186	52	2.47	1213	54	2.61	1240	55	2.75	1265	56	2.89
2760	1013	54	1.74	1046	56	1.87	1079	58	2.02	1111	49	2.16	1140	50	2.30	1170	52	2.45	1198	53	2.59	1225	54	2.74	1251	55	2.89	1277	56	3.03
2880	1024	55	1.83	1057	57	1.97	1090	48	2.12	1121	50	2.27	1151	51	2.42	1181	52	2.57	1209	53	2.72	1236	55	2.87	1263	56	3.02	1288	57	3.17

External Static Pressure (Inches of Water Gauge)

	2.10"			2.20"			2.30"			2.40"		
CFM	RPM	Hz	BHP	RPM	Hz	BHP	RPM	Hz	BHP	RPM	Hz	BHP
3 HP High Static Drive												
1920	1202	53	2.13	1224	54	2.23	1246	55	2.33	1267	56	2.42
2040	1218	54	2.28	1240	55	2.38	1262	56	2.48	1283	57	2.59
2160	1234	55	2.43	1257	56	2.54	1278	57	2.65	1299	57	2.75
2280	1250	55	2.59	1273	56	2.71	1295	57	2.82	1316	58	2.93
2400	1264	56	2.74	1287	57	2.86	1310	58	2.99	1332	59	3.11
2520	1277	56	2.88	1300	58	3.01	1324	59	3.15	—	—	—
2640	1289	57	3.03	1313	58	3.17	—	—	—	—	—	—
2760	1302	58	3.18	—	—	—	—	—	—	—	—	—
2880	—	—	—	—	—	—	—	—	—	—	—	—

Notes:

1. 2-Speed VFD or SZVAV applications are capable of running below 320 cfm/ton during low speed airflow operation, but "full" airflow must be set to 320 cfm/ton or higher.
2. Check General Data for indoor fan motor HP availability.
3. Data includes pressure drop due to wet coil and 1-inch filter.

Table 37. Evaporator fan performance —TWE09041B — constant volume air handler

	External Static Pressure (Inches of Water Gauge)																			
	0.10"		0.20"		0.30"		0.40"		0.50"		0.60"		0.70"		0.80"		0.90"		1.00"	
CFM	RPM	BHP	RPM	BHP	RPM	BHP	RPM	BHP	RPM	BHP	RPM	BHP	RPM	BHP	RPM	BHP	RPM	BHP	RPM	BHP
	1.5 HP Standard Motor with Field Supplied Sheave and Belt				1.5 HP Standard Motor										1.5 Hp Standard Motor with Field Supplied High Satic Sheave/Belt					
2400	532	0.38	594	0.48	642	0.56	689	0.66	737	0.76	783	0.87	826	0.98	868	1.10	907	1.22	945	1.35
2550	558	0.45	618	0.55	665	0.64	709	0.74	754	0.84	799	0.95	841	1.07	882	1.19	921	1.32	958	1.45
2700	587	0.52	643	0.63	689	0.73	731	0.82	773	0.93	816	1.04	857	1.17	897	1.29	935	1.42	972	1.55
2850	613	0.60	664	0.71	713	0.82	753	0.92	792	1.02	833	1.14	873	1.27	912	1.40	950	1.53	986	1.67
3000	643	0.70	688	0.80	737	0.92	777	1.03	814	1.14	852	1.25	891	1.38	928	1.51	965	1.65	1001	1.79
3150	671	0.79	711	0.90	762	1.04	800	1.15	837	1.26	872	1.37	909	1.50	945	1.63	981	1.78	1016	1.92
3300	701	0.91	736	1.01	786	1.15	824	1.27	860	1.39	894	1.51	928	1.63	963	1.77	998	1.91	1032	2.06
3450	729	1.03	763	1.13	808	1.27	849	1.41	883	1.53	916	1.65	949	1.78	982	1.91	1015	2.06	1049	2.21
3600	756	1.15	790	1.26	831	1.40	874	1.56	908	1.69	940	1.81	971	1.94	1002	2.07	1034	2.22	—	—

	External Static Pressure (Inches of Water Gauge)									
	1.10"		1.20"		1.30"		1.40"		1.50"	
CFM	RPM	BHP	RPM	BHP	RPM	BHP	RPM	BHP	RPM	BHP
	1.5 Hp Standard Motor with Field Supplied High Satic Sheave/Belt						2 HP High Static Motor			
2400	980	1.47	1014	1.60	1046	1.72	1077	1.85	1107	1.98
2550	994	1.58	1028	1.71	1060	1.84	1091	1.98	1121	2.11
2700	1007	1.69	1041	1.83	1074	1.97	1105	2.11	—	—
2850	1021	1.81	1055	1.95	1087	2.09	1119	2.24	—	—
3000	1035	1.93	1069	2.08	1101	2.23	—	—	—	—
3150	1050	2.07	1083	2.22	—	—	—	—	—	—
3300	1065	2.21	—	—	—	—	—	—	—	—
3450	—	—	—	—	—	—	—	—	—	—
3600	—	—	—	—	—	—	—	—	—	—

Notes:

1. Data includes pressure drop due to wet coil and 1" filter.
2. Fan motor heat (MBh) = 3.15 x BHP.
3. Check General Data for indoor fan motor HP availability.
4. Factory supplied motors, in commercial equipment, are definite purpose motors, specifically designed and tested to operate reliably and continuously at all cataloged conditions. Using the full horsepower range of our fan motors as shown in our tabular data will not result in nuisance tripping or premature motor failure. Our product's warranty will not be affected.

AIRE Y CLIMA ESPECIALIZADO

Table 38. Evaporator fan performance - TWE0904** - 2-speed VFD, SZVAV air handler

External Static Pressure (Inches of Water Gauge)

	0.10"			0.20"			0.30"			0.40"			0.50"			0.60"			0.70"			0.80"			0.90"			1.00"		
CFM	RPM	Hz	BHP	RPM	Hz	BHP	RPM	Hz	BHP	RPM	Hz	BHP	RPM	Hz	BHP	RPM	Hz	BHP	RPM	Hz	BHP	RPM	Hz	BHP	RPM	Hz	BHP	RPM	Hz	BHP
2 HP Standard Drive																														
2400	532	29	0.38	594	32	0.48	642	34	0.56	689	37	0.66	737	40	0.76	783	42	0.87	826	44	0.98	868	47	1.10	907	49	1.22	945	51	1.35
2550	558	30	0.45	618	33	0.55	665	36	0.64	709	38	0.74	754	40	0.84	799	43	0.95	841	45	1.07	882	47	1.19	921	49	1.32	958	51	1.45
2700	587	31	0.52	643	34	0.63	689	37	0.73	731	39	0.82	773	41	0.93	816	44	1.04	857	46	1.17	897	48	1.29	935	50	1.42	972	52	1.55
2850	613	33	0.60	664	36	0.71	713	38	0.82	753	40	0.92	792	43	1.02	833	45	1.14	873	47	1.27	912	49	1.40	950	51	1.53	986	53	1.67
3000	643	35	0.70	688	37	0.80	737	40	0.92	777	42	1.03	814	44	1.14	852	46	1.25	891	48	1.38	928	50	1.51	965	52	1.65	1001	54	1.79
3150	671	36	0.79	711	38	0.90	762	41	1.04	800	43	1.15	837	45	1.26	872	47	1.37	909	49	1.50	945	51	1.63	981	53	1.78	1016	55	1.92
3300	701	38	0.91	736	40	1.01	786	42	1.15	824	44	1.27	860	46	1.39	894	48	1.51	928	50	1.63	963	52	1.77	998	54	1.91	1032	46	2.06
3450	729	39	1.03	763	41	1.13	808	43	1.27	849	46	1.41	883	47	1.53	916	49	1.65	949	51	1.78	982	53	1.91	1015	45	2.06	1049	46	2.21
3600	756	41	1.15	790	42	1.26	831	45	1.40	874	47	1.56	908	49	1.69	940	42	1.81	971	43	1.94	1002	44	2.07	1034	46	2.22	1066	47	2.37

External Static Pressure (Inches of Water Gauge)

	1.10"			1.20"			1.30"			1.40"			1.50"			1.60"			1.70"			1.80"			1.90"			2.00"		
CFM	RPM	Hz	BHP	RPM	Hz	BHP	RPM	Hz	BHP	RPM	Hz	BHP	RPM	Hz	BHP	RPM	Hz	BHP	RPM	Hz	BHP	RPM	Hz	BHP	RPM	Hz	BHP	RPM	Hz	BHP
2 HP Standard Drive																**3 HP High Static Drive**														
2400	980	53	1.47	1014	54	1.60	1046	56	1.72	1077	58	1.85	1107	59	1.98	1135	50	2.10	1163	51	2.23	1189	53	2.36	1215	54	2.48	1240	55	2.61
2550	994	53	1.58	1028	55	1.71	1060	57	1.84	1091	59	1.98	1121	50	2.11	1150	51	2.25	1178	52	2.38	1204	53	2.51	1230	54	2.65	1256	56	2.78
2700	1007	54	1.69	1041	56	1.83	1074	58	1.97	1105	49	2.11	1135	50	2.25	1164	52	2.39	1192	53	2.53	1219	54	2.67	1245	55	2.82	1271	56	2.96
2850	1021	55	1.81	1055	57	1.95	1087	48	2.09	1119	49	2.24	1149	51	2.39	1178	52	2.54	1206	53	2.69	1234	55	2.84	1260	56	2.99	1285	57	3.14
3000	1035	56	1.93	1069	47	2.08	1101	49	2.23	1132	50	2.38	1162	51	2.54	1192	53	2.69	1220	54	2.85	1247	55	3.00	1274	56	3.16	—	—	—
3150	1050	46	2.07	1083	48	2.22	1115	49	2.37	1146	51	2.53	1176	52	2.69	1205	53	2.85	1233	55	3.01	1261	56	3.17	—	—	—	—	—	—
3300	1065	47	2.21	1097	49	2.36	1129	50	2.52	1160	51	2.68	1190	53	2.85	1219	54	3.01	—	—	—	—	—	—	—	—	—	—	—	—
3450	1081	48	2.36	1113	49	2.52	1144	51	2.68	1174	52	2.85	1204	53	3.02	—	—	—	—	—	—	—	—	—	—	—	—	—	—	—
3600	1098	49	2.53	1129	50	2.69	1159	51	2.86	1189	53	3.02	—	—	—	—	—	—	—	—	—	—	—	—	—	—	—	—	—	—

External Static Pressure (Inches of Water Gauge)

	2.10"			2.20"			2.30"		
CFM	RPM	Hz	BHP	RPM	Hz	BHP	RPM	Hz	BHP
3 HP High Static Drive									
2400	1264	56	2.74	1287	57	2.86	1310	58	2.99
2550	1280	57	2.92	1304	58	3.05	1327	59	3.19
2700	1295	57	3.10	—	—	—	—	—	—
2850	—	—	—	—	—	—	—	—	—
3000	—	—	—	—	—	—	—	—	—
3150	—	—	—	—	—	—	—	—	—
3300	—	—	—	—	—	—	—	—	—
3450	—	—	—	—	—	—	—	—	—
3600	—	—	—	—	—	—	—	—	—

Notes:

1. 2-Speed VFD or SZVAV applications are capable of running below 320 cfm/ton during low speed airflow operation, but "full" airflow must be set to 320 cfm/ton or higher.
2. Check General Data for indoor fan motor HP availability.
3. Data includes pressure drop due to wet coil and 1-inch filter.

Table 39. Evaporator fan performance —TWE12041B — constant volume air handler

	External Static Pressure (Inches of Water Gauge)													
	0.10"		0.20"		0.30"		0.40"		0.50"		0.60"		0.70"	
CFM	RPM	BHP	RPM	BHP	RPM	BHP	RPM	BHP	RPM	BHP	RPM	BHP	RPM	BHP
	2 HP Standard Motor													
3200	570	0.60	616	0.69	657	0.80	695	0.90	731	1.00	766	1.10	800	1.21
3400	601	0.71	643	0.80	684	0.92	720	1.02	755	1.13	788	1.24	821	1.35
3600	631	0.84	670	0.92	710	1.04	746	1.16	779	1.27	812	1.39	843	1.50
3800	662	0.98	699	1.06	738	1.19	772	1.31	805	1.43	836	1.55	866	1.67
4000	695	1.14	728	1.21	765	1.34	799	1.47	831	1.60	861	1.72	890	1.85
4200	727	1.31	757	1.38	792	1.50	826	1.65	857	1.78	887	1.91	915	2.05
4400	757	1.49	788	1.58	820	1.69	853	1.84	884	1.98	913	2.12	940	2.26
4600	788	1.69	818	1.78	849	1.89	881	2.04	911	2.20	—	—	—	—
4800	824	1.93	849	2.01	877	2.11	908	2.26	—	—	—	—	—	—

	External Static Pressure (Inches of Water Gauge)													
	0.80"		0.90"		1.00"		1.10"		1.20"		1.30"		1.40"	
CFM	RPM	BHP	RPM	BHP	RPM	BHP	RPM	BHP	RPM	BHP	RPM	BHP	RPM	BHP
	2 HP Standard Motor with Field Supplied Sheave/Belt													
3200	834	1.33	867	1.45	900	1.58	933	1.70	964	1.83	993	1.96	1022	2.09
3400	854	1.46	886	1.59	917	1.72	947	1.85	978	1.99	1008	2.12	1037	2.26
3600	874	1.62	905	1.74	935	1.87	965	2.01	993	2.15	1023	2.29	—	—
3800	896	1.79	925	1.91	954	2.05	983	2.19	—	—	—	—	—	—
4000	919	1.98	947	2.10	975	2.24	—	—	—	—	—	—	—	—
4200	943	2.18	970	2.31	—	—	—	—	—	—	—	—	—	—
4400	—	—	—	—	—	—	—	—	—	—	—	—	—	—
4600	—	—	—	—	—	—	—	—	—	—	—	—	—	—
4800	—	—	—	—	—	—	—	—	—	—	—	—	—	—

Notes:

1. Data includes pressure drop due to wet coil and 1" filter.
2. Fan motor heat (MBh) = 3.15 x BHP.
3. Check General Data for indoor fan motor HP availability.
4. Factory supplied motors, in commercial equipment, are definite purpose motors, specifically designed and tested to operate reliably and continuously at all cataloged conditions. Using the full horsepower range of our fan motors as shown in our tabular data will not result in nuisance tripping or premature motor failure. Our product's warranty will not be affected.

AIRE Y CLIMA ESPECIALIZADO

Table 40. Evaporator fan performance - TWE1204** - 2-speed VFD, SZVAV air handler

	External Static Pressure (Inches of Water Gauge)																													
	0.10"			0.20"			0.30"			0.40"			0.50"			0.60"			0.70"			0.80"			0.90"			1.00"		
CFM	RPM	Hz	BHP	RPM	Hz	BHP	RPM	Hz	BHP	RPM	Hz	BHP	RPM	Hz	BHP	RPM	Hz	BHP	RPM	Hz	BHP	RPM	Hz	BHP	RPM	Hz	BHP	RPM	Hz	BHP
2 HP Standard Drive																														
3200	570	37	0.60	616	40	0.69	657	43	0.80	695	45	0.90	731	48	1.00	766	50	1.10	800	52	1.21	834	55	1.33	867	57	1.45	900	59	1.58
3400	601	39	0.71	643	42	0.80	684	45	0.92	720	47	1.02	755	49	1.13	788	52	1.24	821	54	1.35	854	56	1.46	886	58	1.59	917	60	1.72
3600	631	41	0.84	670	44	0.92	710	46	1.04	746	49	1.16	779	51	1.27	812	53	1.39	843	55	1.50	874	57	1.62	905	59	1.74	935	49	1.87
3800	662	43	0.98	699	46	1.06	738	48	1.19	772	50	1.31	805	53	1.43	836	55	1.55	866	57	1.67	896	59	1.79	925	60	1.91	954	51	2.05
4000	695	45	1.14	728	48	1.21	765	50	1.34	799	52	1.47	831	54	1.60	861	56	1.72	890	58	1.85	919	60	1.98	947	50	2.10	975	52	2.24
4200	727	47	1.31	757	50	1.38	792	52	1.50	826	54	1.65	857	56	1.78	887	58	1.91	915	60	2.05	943	50	2.18	970	51	2.31	996	53	2.44
4400	757	49	1.49	788	52	1.58	820	54	1.69	853	56	1.84	884	58	1.98	913	48	2.12	940	50	2.26	967	51	2.40	993	53	2.54	1019	54	2.67
4600	788	52	1.69	818	53	1.78	849	55	1.89	881	58	2.04	911	48	2.20	939	50	2.34	966	51	2.48	992	53	2.63	1018	54	2.78	1042	55	2.92
4800	824	54	1.93	849	55	2.01	877	57	2.11	908	48	2.26	937	50	2.42	966	51	2.58	992	53	2.73	1017	54	2.88	1042	55	3.03	1067	56	3.19

	External Static Pressure (Inches of Water Gauge)																							
	1.10"			1.20"			1.30"			1.40"			1.50"			1.60"			1.70"			1.80"		
CFM	RPM	Hz	BHP	RPM	Hz	BHP	RPM	Hz	BHP	RPM	Hz	BHP	RPM	Hz	BHP	RPM	Hz	BHP	RPM	Hz	BHP	RPM	Hz	BHP
3 HP High Static Drive																								
3200	933	49	1.70	964	51	1.83	993	53	1.96	1022	54	2.09	1050	56	2.22	1077	57	2.36	1103	58	2.49	1128	60	2.62
3400	947	50	1.85	978	52	1.99	1008	53	2.12	1037	55	2.26	1064	56	2.40	1091	58	2.54	1117	59	2.68	1142	60	2.82
3600	965	51	2.01	993	53	2.15	1023	54	2.29	1051	56	2.44	1079	57	2.58	1106	59	2.73	1132	60	2.88	—	—	—
3800	983	52	2.19	1011	54	2.33	1039	55	2.47	1066	56	2.62	1094	58	2.78	1120	59	2.93	—	—	—	—	—	—
4000	1002	53	2.38	1029	54	2.52	1056	56	2.67	1083	57	2.82	1109	59	2.98	1135	60	3.14	—	—	—	—	—	—
4200	1023	54	2.58	1049	56	2.73	1075	57	2.88	1101	58	3.04	1126	60	3.20	—	—	—	—	—	—	—	—	—
4400	1045	55	2.82	1069	57	2.96	1095	58	3.11	—	—	—	—	—	—	—	—	—	—	—	—	—	—	—
4600	1067	56	3.07	1091	58	3.21	—	—	—	—	—	—	—	—	—	—	—	—	—	—	—	—	—	—
4800	—	—	—	—	—	—	—	—	—	—	—	—	—	—	—	—	—	—	—	—	—	—	—	—

Notes:

1. 2-Speed VFD or SZVAV applications are capable of running below 320 cfm/ton during low speed airflow operation, but "full" airflow must be set to 320 cfm/ton or higher.
2. Check General Data for indoor fan motor HP availability.
3. Data includes pressure drop due to wet coil and 1-inch filter.

Table 41. Evaporator fan performance - TWE1804** - 2-speed VFD, SZVAV air handler

	External Static Pressure (Inches of Water Gauge)																							
	0.10"			0.20"			0.30"			0.40"			0.50"			0.60"			0.70"			0.80"		
CFM	RPM	Hz	BHP	RPM	Hz	BHP	RPM	Hz	BHP	RPM	Hz	BHP	RPM	Hz	BHP	RPM	Hz	BHP	RPM	Hz	BHP	RPM	Hz	BHP
3 HP Standard Drive																								
4800	548	38	0.92	597	42	1.07	643	45	1.22	687	48	1.37	728	51	1.53	766	54	1.69	802	56	1.85	837	59	2.01
5100	576	40	1.08	623	44	1.24	667	47	1.40	709	50	1.56	749	53	1.72	787	55	1.89	822	58	2.06	856	60	2.23
5400	604	42	1.27	648	46	1.43	692	49	1.60	732	51	1.77	771	54	1.94	808	57	2.12	842	59	2.30	875	44	2.48
5700	633	44	1.47	674	47	1.64	716	50	1.82	756	53	2.00	793	56	2.18	829	58	2.36	863	61	2.55	895	45	2.74
6000	662	46	1.70	702	49	1.88	741	52	2.06	779	55	2.25	816	57	2.44	851	60	2.63	884	45	2.83	916	46	3.03
6300	690	49	1.95	728	51	2.12	767	54	2.32	804	56	2.52	839	59	2.72	873	44	2.92	905	46	3.12	937	47	3.33
6600	721	51	2.24	757	53	2.41	793	56	2.61	828	58	2.81	863	43	3.02	896	45	3.24	928	47	3.45	958	48	3.66
6900	748	53	2.51	784	55	2.71	819	58	2.92	853	43	3.14	887	45	3.36	919	46	3.57	950	48	3.79	980	49	4.02
7200	778	55	2.84	812	57	3.04	846	43	3.26	879	44	3.49	911	46	3.71	943	47	3.95	973	49	4.17	1002	50	4.40

	External Static Pressure (Inches of Water Gauge)																							
	0.90"			1.00"			1.10"			1.20"			1.30"			1.40"			1.50"			1.60"		
CFM	RPM	Hz	BHP	RPM	Hz	BHP	RPM	Hz	BHP	RPM	Hz	BHP	RPM	Hz	BHP	RPM	Hz	BHP	RPM	Hz	BHP	RPM	Hz	BHP
5 HP High Static Drive																								
4800	870	44	2.18	901	45	2.34	931	47	2.51	961	48	2.69	991	50	2.86	1020	51	3.04	1047	53	3.22	1074	54	3.40
5100	888	45	2.41	919	46	2.58	949	48	2.76	978	49	2.94	1006	51	3.12	1034	52	3.31	1062	53	3.50	1088	55	3.69
5400	907	46	2.66	938	47	2.84	967	49	3.03	996	50	3.22	1023	52	3.40	1050	53	3.59	1077	54	3.79	1103	56	3.99
5700	927	47	2.93	957	48	3.12	986	50	3.32	1014	51	3.51	1041	52	3.71	1067	54	3.91	1093	55	4.10	1118	56	4.31
6000	947	48	3.22	976	49	3.42	1005	51	3.63	1032	52	3.83	1059	53	4.04	1085	55	4.24	1111	56	4.45	1135	57	4.66
6300	967	49	3.54	996	50	3.75	1024	52	3.96	1052	53	4.17	1078	54	4.38	1104	56	4.60	1129	57	4.81	1153	58	5.03
6600	988	50	3.87	1016	51	4.09	1044	53	4.31	1071	54	4.53	1097	55	4.75	1123	57	4.98	1147	58	5.20	—	—	—
6900	1009	51	4.25	1037	52	4.47	1065	54	4.69	1091	55	4.92	1117	56	5.16	—	—	—	—	—	—	—	—	—
7200	1031	52	4.63	1059	53	4.86	1085	55	5.10	—	—	—	—	—	—	—	—	—	—	—	—	—	—	—

	External Static Pressure (Inches of Water Gauge)														
	1.70"			1.80"			1.90"			2.00"			2.10"		
CFM	RPM	Hz	BHP	RPM	Hz	BHP	RPM	Hz	BHP	RPM	Hz	BHP	RPM	Hz	BHP
5 HP High Static Drive															
4800	1099	55	3.58	1124	57	3.76	1148	58	3.94	1172	59	4.12	1194	60	4.30
5100	1114	56	3.88	1139	57	4.07	1163	59	4.26	1187	60	4.45	—	—	—
5400	1129	57	4.19	1154	58	4.39	1178	59	4.59	—	—	—	—	—	—
5700	1144	58	4.51	1169	59	4.72	1193	60	4.94	—	—	—	—	—	—
6000	1160	58	4.87	1184	60	5.08	—	—	—	—	—	—	—	—	—
6300	—	—	—	—	—	—	—	—	—	—	—	—	—	—	—
6600	—	—	—	—	—	—	—	—	—	—	—	—	—	—	—
6900	—	—	—	—	—	—	—	—	—	—	—	—	—	—	—
7200	—	—	—	—	—	—	—	—	—	—	—	—	—	—	—

Notes:

1. 2-Speed VFD or SZVAV applications are capable of running below 320 cfm/ton during low speed airflow operation, but "full" airflow must be set to 320 cfm/ton or higher.
2. Check General Data for indoor fan motor HP availability.
3. Data includes pressure drop due to wet coil and 2-inch filter.

Table 42. Evaporator fan performance - TWE2404** - 2-speed VFD, SZVAV air handler

External Static Pressure (Inches of Water Gauge)

	0.10"			0.20"			0.30"			0.40"			0.50"			0.60"			0.70"			0.80"			0.90"			1.00"		
CFM	RPM	Hz	BHP	RPM	Hz	BHP	RPM	Hz	BHP	RPM	Hz	BHP	RPM	Hz	BHP	RPM	Hz	BHP	RPM	Hz	BHP	RPM	Hz	BHP	RPM	Hz	BHP	RPM	Hz	BHP
	5 HP Standard Drive																													
6400	619	33	1.56	656	35	1.70	691	36	1.84	724	38	1.98	756	40	2.12	786	41	2.26	816	43	2.41	845	45	2.56	873	46	2.72	900	47	2.87
6800	654	34	1.86	688	36	2.00	722	38	2.15	754	40	2.30	784	41	2.44	814	43	2.59	842	44	2.74	869	46	2.90	897	47	3.07	924	49	3.23
7200	687	36	2.17	721	38	2.34	753	40	2.49	784	41	2.65	813	43	2.81	842	44	2.96	869	46	3.12	895	47	3.29	921	49	3.46	947	50	3.62
7600	721	38	2.54	754	40	2.72	784	41	2.87	814	43	3.04	843	44	3.21	870	46	3.38	896	47	3.53	922	49	3.71	947	50	3.88	972	51	4.06
8000	757	40	2.96	788	42	3.13	817	43	3.30	845	45	3.48	872	46	3.65	899	47	3.82	925	49	4.00	950	50	4.16	974	51	4.35	998	53	4.53
8400	790	42	3.37	820	43	3.57	849	45	3.76	877	46	3.95	903	48	4.13	929	49	4.32	953	50	4.49	978	52	4.67	1002	53	4.86	1025	47	5.05
8800	826	38	3.88	854	39	4.07	881	40	4.26	908	41	4.46	933	42	4.65	959	44	4.85	982	45	5.04	1006	46	5.22	1030	47	5.42	1052	48	5.61
9200	863	39	4.44	889	40	4.64	915	42	4.84	939	43	5.02	965	44	5.24	989	45	5.43	1012	46	5.62	1036	47	5.83	1058	48	6.02	1080	49	6.22
9600	897	41	5.01	922	42	5.20	948	43	5.44	971	44	5.63	996	45	5.84	1019	46	6.05	1042	47	6.27	1065	48	6.47	—	—	—	—	—	—

External Static Pressure (Inches of Water Gauge)

	1.10"			1.20"			1.30"			1.40"			1.50"			1.60"			1.70"			1.80"			1.90"			2.00"		
CFM	RPM	Hz	BHP	RPM	Hz	BHP	RPM	Hz	BHP	RPM	Hz	BHP	RPM	Hz	BHP	RPM	Hz	BHP	RPM	Hz	BHP	RPM	Hz	BHP	RPM	Hz	BHP	RPM	Hz	BHP
	5 HP Standard Drive																					7.5 HP High Static Drive								
6400	927	49	3.03	952	50	3.19	977	51	3.34	1001	53	3.48	1024	54	3.63	1050	55	3.80	1075	57	3.98	1098	50	4.15	1120	51	4.31	1139	52	4.47
6800	949	50	3.40	974	51	3.57	999	53	3.74	1022	54	3.90	1045	55	4.05	1067	56	4.21	1090	50	4.36	1114	51	4.55	1138	52	4.74	1160	53	4.92
7200	972	51	3.80	997	53	3.97	1021	54	4.15	1044	55	4.34	1067	56	4.51	1089	49	4.68	1110	50	4.84	1131	51	5.00	1152	52	5.17	1175	53	5.36
7600	996	52	4.24	1020	54	4.42	1044	55	4.60	1067	56	4.80	1089	57	4.99	1111	50	5.18	1132	51	5.36	1153	52	5.53	1173	53	5.70	1193	54	5.88
8000	1021	54	4.72	1044	55	4.91	1067	48	5.10	1090	50	5.29	1112	51	5.49	1134	52	5.69	1155	52	5.89	1175	53	6.09	1195	54	6.28	1215	55	6.46
8400	1047	48	5.24	1069	49	5.43	1091	50	5.63	1113	51	5.83	1135	52	6.04	1156	53	6.24	1177	53	6.45	1198	54	6.67	1217	55	6.87	1237	56	7.08
8800	1074	49	5.81	1095	50	6.01	1117	51	6.22	1138	52	6.42	1159	53	6.63	1180	54	6.84	1200	55	7.06	1220	55	7.28	1240	56	7.49	1259	57	7.71
9200	1101	50	6.42	1122	51	6.63	1143	52	6.84	1163	53	7.05	1183	54	7.27	1204	55	7.49	1224	56	7.71	—	—	—	—	—	—	—	—	—
9600	—	—	—	—	—	—	—	—	—	—	—	—	—	—	—	—	—	—	—	—	—	—	—	—	—	—	—	—	—	—

External Static Pressure (Inches of Water Gauge)

	2.10"			2.20"			2.30"			2.40"		
CFM	RPM	Hz	BHP	RPM	Hz	BHP	RPM	Hz	BHP	RPM	Hz	BHP
	7.5 HP High Static Drive											
6400	1158	53	4.62	1177	53	4.78	1195	54	4.93	1213	55	5.08
6800	1181	54	5.09	1200	55	5.26	1218	55	5.43	1236	56	5.59
7200	1198	54	5.56	1220	55	5.76	1240	56	5.95	1259	57	6.13
7600	1213	55	6.05	1234	56	6.25	1256	57	6.46	1277	58	6.67
8000	1234	56	6.64	1253	57	6.82	1272	58	7.01	1292	59	7.20
8400	1256	57	7.28	1275	58	7.48	1293	59	7.66	—	—	—
8800	—	—	—	—	—	—	—	—	—	—	—	—
9200	—	—	—	—	—	—	—	—	—	—	—	—
9600	—	—	—	—	—	—	—	—	—	—	—	—

Notes:

1. 2-Speed VFD or SZVAV applications are capable of running below 320 cfm/ton during low speed airflow operation, but "full" airflow must be set to 320 cfm/ton or higher.
2. Check General Data for indoor fan motor HP availability.
3. Data includes pressure drop due to wet coil and 2-inch filter.

Table 43. Standard fan motors - constant volume air handlers

Model	Motor	Motor Sheave Turns Open	Nominal RPM	Required Field Supplied Components		
				Motor Sheave	Blower Sheave	Belt
TWE060	Standard Motor 0.75 HP	0	1071	N/A	N/A	N/A
		1	1000			
		2	928			
		3	857			
		4	785			
		5	714			
TWE090	Standard Motor 1.5 HP	0	847	N/A	N/A	N/A
		1	791			
		2	734			
		3	678			
		4	621			
		5	565			
TWE090	Standard Motor with Field Supplied Components - 1.5 HP (Low Static)	1	406	Variable Pitch (2.0 - 3.0 Inch Pitch Diameter), 0.625 Inch Bore, Single Groove, Browning 1VP34	Fixed pitch (8.5 Inch Pitch Diameter), 1 Inch Bore, Single Groove, Browning BK95	Browning A52
		2	446			
		3	487			
		4	528			
		5	568			
		6	609			
TWE090	Standard Motor with Field Supplied Components - 1.5 HP (High Static)	1	863	Variable Pitch (3-4 Inch Pitch Diameter), 0.625 Inch Bore, Single Groove, Browning 1VP44	Fixed Pitch (6 Inch Pitch Diameter), 1 Inch Bore, Single Groove, Browning BK70	Browning A50
		2	920			
		3	978			
		4	1035			
		5	1093			
		6	1150			
TWE120	Standard Motor 2 HP	0	818	N/A	N/A	N/A
		1	773			
		2	727			
		3	682			
		4	636			
		5	591			
TWE120	Standard Motor with Field Supplied Components - 2 HP (High Static)	1	772	Variable Pitch (3-4 Inch Pitch Diameter), 0.875 Inch Bore, Single Groove, Browning 1VP44	Fixed Pitch (6.7 Inch Pitch Diameter), 1 Inch Bore, Single Groove, Browning AK71	Browning A51
		2	824			
		3	875			
		4	927			
		5	978			
		6	1030			

Table 44. High static fan motors - constant volume air handlers

Model	Motor	Motor Sheave Turns Open	Nominal RPM	Required Field Supplied Components		
				Motor Sheave	Blower Sheave	Belt
TWE060	High Static Motor 1.5 HP	0	1346	N/A	N/A	N/A
		1	1279			
		2	1212			
		3	1144			
		4	1077			
		5	1010			
TWE090	High Static Motor 2 HP	0	1094	N/A	N/A	N/A
		1	1039			
		2	984			
		3	930			
		4	875			
		5	820			

Table 45. Discharge plenum and grille assembly throw distance (ft) — air handler (60 Hz)

Tons	Model No.	CFM	Louver Angle Deflection Position			
			Straight	20°	40°	55°
5	TWE0604*A/B	1600	42	31	26	20
		1800	46	37	29	22
		2000	48	43	33	24
		2200	51	50	36	25
		2400	54	57	39	29
6	TWE0724*B	1920	48	33	30	27
		2160	50	38	32	28
		2400	52	43	35	29
		2640	54	47	38	30
		2880	57	51	41	32
7.5	TWE0904*A/B	2400	52	43	35	29
		2700	55	48	38	31
		3000	58	53	42	32
		3300	62	57	46	35
		3600	66	60	50	37
10	TWE1204*A/B	3200	56	46	38	30
		3600	62	51	42	33
		4000	66	57	47	35
		4400	71	62	52	38
		4800	76	67	56	42
15	TWE1804*B	4900	47	38	32	25
		5400	52	44	37	29
		6000	57	49	41	32
		6600	61	53	43	34
		7200	65	57	46	35
20	TWE2404*B	6400	56	46	38	30
		7200	62	51	42	33
		8000	66	57	47	35
		8800	71	62	52	38
		9600	76	67	56	42

Notes:

1. Assumes incompressible and adiabatic flow through grille.
2. Throw distance values are based on a terminal velocity of 75 FPM.
3. Throw distance values at other terminal velocities may be established by multiplying throw distances in the table above by throw factor as follows: for 50 FPM terminal velocity, multiply by 1.50 throw factor; for 100 FPM terminal velocity, multiply by 0.75 throw factor; for 150 FPM terminal velocity, multiply by 0.50 throw factor.
4. SZVAV/2-Speed VFD available for 6–25 ton only.

AIRE Y CLIMA ESPECIALIZADO

Table 46. Electric heat discharge plenum and grille airflow (CFM) - constant volume air handler (60Hz)

Tons	Unit Model No.	Electric Heater Model No.	Airflow (CFM)	
			Minimum	Maximum
5	TWE06041A, B	BAYHTRS117*	2000	2400
	TWE06043A, B	BAYHTRR315*	2000	2400
	TWE06044A, B	BAYHTRR415*	2000	2400
6	TWE07243B	BAYHTRR315*	2000	2880
	TWE07243B	BAYHTRN325*	2000	2880
	TWE07244B	BAYHTRR415*	2000	2880
	TWE07244B	BAYHTRN425*	2000	2880
7.5	TWE09041A, B	BAYHTRS117*	3000	3600
	TWE09041A, B	BAYHTRR123*	3375	3600
7.5	TWE09043A, B	BAYHTRR315*	2625	3600
	TWE09043A, B	BAYHTRN325*	3000	3600
	TWE09044A, B	BAYHTRR415*	2625	3600
	TWE09044A, B	BAYHTRN425*	2625	3600
10	TWE12041A, B	BAYHTRS117*	3500	4800
	TWE12041A, B	BAYHTRR123*	4000	4800
10	TWE12043A, B	BAYHTRR315*	4000	4800
	TWE12043A, B	BAYHTRN325*	3500	4800
	TWE12044A, 4B	BAYHTRR415*	3500	4800
	TWE12044A, 4B	BAYHTRN425*	3500	4800
15	TWE18043B	BAYHTRP330*	5250	7200
	TWE18044B	BAYHTRP430*	5250	7200
20	TWE24043B	BAYHTRP330*	7000	9600
	TWE24044B	BAYHTRP430*	7000	9600

Note: SZVAV/2-Speed VFD available for 6–25 ton only.

Table 47. Static pressure drop through accessories (inches of water column) - air handler (60Hz)

Tons	Unit Model No.	CFM	Return Grille	Discharge Plenum & Grille	2" MERV 13 Filter	Electric Heaters (kW)				Hydronic Coils	
						5–10	15–20	25–30	35–50	Steam	Hot Water
5	TWE0604*A/B	1600	0.12	0.21	0.22	0.08	0.08	0.14	—	0.44	0.31
		2000	0.18	0.33	0.29	0.13	0.13	0.19	—	0.62	0.44
		2400	0.28	0.47	0.36	0.19	0.19	0.37	—	0.80	0.59
6	TWE0724*B	1920	0.04	0.20	0.15	0.01	0.03	0.04	0.06	0.31	0.16
		2400	0.08	0.27	0.19	0.03	0.06	0.08	0.12	0.38	0.23
		2880	0.12	0.37	0.24	0.05	0.11	0.15	0.21	0.48	0.31
7.5	TWE0904*A/B	2400	0.08	0.27	0.19	0.03	0.06	0.08	0.12	0.38	0.23
		3000	0.13	0.40	0.25	0.06	0.12	0.17	0.23	0.50	0.33
		3600	0.18	0.58	0.31	0.08	0.16	0.24	0.32	0.66	0.44
10	TWE1204*A/B	3200	0.07	0.43	0.19	0.06	0.13	0.19	0.26	0.42	0.40
		4000	0.11	0.66	0.25	0.10	0.20	0.30	0.40	0.59	0.56
		4800	0.15	0.95	0.31	0.14	0.28	0.42	0.57	0.76	0.75
15	TWE1804*B	4800	0.09	0.23	0.19	0.03	0.03	0.06	0.08	0.46	0.38
		6000	0.15	0.34	0.25	0.06	0.06	0.12	0.17	0.64	0.54
		7200	0.20	0.49	0.31	0.08	0.08	0.16	0.24	0.82	0.72

Table 47. Static pressure drop through accessories (inches of water column) - air handler (60Hz) (continued)

Tons	Unit Model No.	CFM	Return Grille	Discharge Plenum & Grille	2" MERV 13 Filter	Electric Heaters (kW)				Hydronic Coils	
						5–10	15–20	25–30	35–50	Steam	Hot Water
20	TWE2404*B	6400	0.11	0.43	0.22	0.06	0.06	0.13	0.19	0.50	0.41
		8000	0.17	0.66	0.29	0.10	0.10	0.20	0.30	0.70	0.58
		9600	0.23	0.95	0.36	0.14	0.14	0.28	0.42	0.89	0.78

Notes:
1. SZVAV/2-Speed VFD available for 6–25 ton only.
2. Return air filter ESP included in Fan Performance Table data.
3. Discharge plenum and grille - at louver opening angle of 42 degrees. For ESP at other angle openings, see accessory installation instructions.

Table 48. Auxiliary electric heat capacity - air handler (60Hz)

Unit Model No.	Total kW	No. of Stages	Stage 1		Stage 2		Total	
			kW Input	BTUH Output	kW Input	BTUH Output	kW Input	BTUH Output
TWE06041A, TWE06041B	5.76	1	5.76	19659	–	–	5.76	19659
	11.52	1	11.52	39318	–	–	11.52	39318
	17.28	1	17.28	58977	–	–	17.28	58977
	23.04	2	11.52	39318	11.52	39318	23.04	78636
TWE06043A, TWE06044A, TWE0604WA, TWE06043B, TWE06044B	5.00	1	5.00	17065	–	–	5.00	17065
	9.96	1	9.96	33993	–	–	9.96	33993
	14.96	1	14.96	51058	–	–	14.96	51058
	24.92	2	14.96	51058	9.96	33993	24.92	85051
TWE07243B, TWE07244B, TWE0724WB	5.00	1	5.00	17065	–	–	5.00	17065
	9.96	1	9.96	33993	–	–	9.96	33993
	14.96	1	14.96	51058	–	–	14.96	51058
	24.92	2	14.96	51058	9.96	33993	24.92	85051
TWE09041A, TWE09041B	5.76	1	5.76	19659	–	–	5.76	19659
	11.52	1	11.52	39318	–	–	11.52	39318
	17.28	1	17.28	58977	–	–	17.28	58977
	23.04	2	11.52	39318	11.52	39318	23.04	78636
	28.80	2	17.28	58977	11.52	39318	28.80	98295
TWE09043A, TWE09043B, TWE0904WA, TWE0904WB	5.00	1	5.00	17065	–	–	5.00	17065
	9.96	1	9.96	33993	–	–	9.96	33993
	14.96	1	14.96	51058	–	–	14.96	51058
	24.92	2	14.96	51058	9.96	33993	24.92	85051
	34.88	2	19.92	67987	14.96	51058	34.88	119045
TWE09043B, TWE09044B, TWE0904WB	5.00	1	5.00	17065	–	–	5.00	17065
	9.96	1	9.96	33993	–	–	9.96	33993
	14.96	1	14.96	51058	–	–	14.96	51058
	24.92	2	14.96	51058	9.96	33993	24.92	85051
	34.88	2	19.92	67987	14.96	51058	34.88	119045
TWE12041A, TWE12041B	5.76	1	5.76	19659	–	–	5.76	19659
	11.52	1	11.52	39318	–	–	11.52	39318
	17.28	1	17.28	58977	–	–	17.28	58977
	23.04	2	11.52	39318	11.52	39318	23.04	78636
	28.80	2	17.28	58977	11.52	39318	28.80	98295
TWE12043A, TWE1204WA, TWE12044A, TWE12044B, TWE12043B, TWE1204WB	5.00	1	5.00	17065	–	–	5.00	17065
	9.96	1	9.96	33993	–	–	9.96	33993
	14.96	1	14.96	51058	–	–	14.96	51058
	24.92	2	14.96	51058	9.96	33993	24.92	85051
	34.88	2	19.92	67987	14.96	51058	34.88	119045
TWE18043B, TWE1804WB	10.00	1	10.00	34130	–	–	10.00	34130
	19.92	1	19.92	67987	–	–	19.92	67987
	29.92	2	19.92	67987	10.00	34130	29.92	102117
	49.84	2	29.92	102117	19.92	67987	49.84	170104
TWE18043B, TWE18044B, TWE1804WB	10.00	1	10.00	34130	–	–	10.00	34130

AIRE Y CLIMA ESPECIALIZADO

Table 48. Auxiliary electric heat capacity - air handler (60Hz) (continued)

Unit Model No.	Total kW	No. of Stages	Stage 1		Stage 2		Total	
			kW Input	BTUH Output	kW Input	BTUH Output	kW Input	BTUH Output
	19.92	1	19.92	67987	–	–	19.92	67987
	29.92	2	19.92	67987	10.00	34130	29.92	102117
	49.84	2	29.92	102117	19.92	67987	49.84	170104
TWE2404*B	10.00	1	10.00	34130	–	–	10.00	34130
	19.92	1	19.92	67987	–	–	19.92	67987
	29.92	2	19.92	67987	10.00	34130	29.92	102117
	49.84	2	29.92	102117	19.92	67987	49.84	170104

Notes:

1. Heaters are rated at 240V, 480V, and 600V. For other than rated voltage, capacity = (Voltage/Related Voltage)^2 x Rated Capacity.
2. SZVAV/2-Speed VFD available for 6–25 ton only.

Table 49. Steam heating coil capacity – air handler steam pressure (PSIG) (60Hz)

Unit Model No.	Airflow (CFM)	EAT (°F)	Steam Pressure (PSIG)														
			2 PSI			5 PSI			10 PSI			15 PSI			25 PSI		
			LAT	MBh	Cond. lb/hr	LAT	MBh	Cond. lb/hr	LAT	MBh	Cond. lb/hr	LAT	MBh	Cond. lb/hr	LAT	MBh	Cond. lb/hr
TWE0604*A, TWE0604*B	1600	40	97	99	103	100	104	108	104	111	117	108	117	124	113	127	136
		60	111	88	91	114	93	97	118	100	105	121	106	112	127	116	124
		80	125	77	80	127	82	85	131	89	94	135	95	101	140	105	112
	2000	40	90	108	112	93	114	118	96	122	128	99	129	136	104	139	149
		60	104	96	100	107	102	106	111	110	115	114	116	123	119	127	136
		80	119	84	87	121	90	93	125	98	102	128	104	110	133	115	123
	2400	40	85	116	120	87	123	127	90	131	137	93	138	146	98	150	160
		60	100	104	107	102	110	114	105	118	124	108	125	132	113	137	146
		80	115	91	94	117	97	100	120	105	110	123	112	118	127	123	132
TWE072*B	1920	40	106	151	157	112	159	165	116	169	178	121	179	189	126	194	207
		60	120	134	139	124	141	147	128	153	160	133	162	172	139	177	189
		80	133	117	121	136	125	131	140	136	143	145	144	152	151	159	170
	2400	40	102	162	168	106	171	177	110	182	191	114	192	203	120	208	222
		60	115	144	149	119	152	158	123	164	172	127	174	184	133	190	203
		80	129	126	130	132	134	140	136	146	153	140	155	164	146	171	183
	2880	40	96	174	180	100	183	190	104	196	205	107	206	218	113	223	239
		60	110	154	159	113	163	170	117	176	184	121	186	197	126	204	218
		80	124	135	140	127	144	150	131	157	164	134	166	176	140	184	197
TWE0904*A, TWE0904*B	2400	40	102	162	168	106	171	177	110	182	191	114	192	203	120	208	222
		60	115	144	149	119	152	158	123	164	172	127	174	184	133	190	203
		80	129	126	130	132	134	140	136	146	153	140	155	164	146	171	183
	3000	40	95	178	183	97	187	194	101	200	209	105	210	222	110	228	244
		60	109	158	163	111	167	174	115	180	188	119	190	201	124	208	222
		80	122	138	143	125	147	153	129	160	168	132	170	180	138	188	201
	3600	40	89	191	197	91	201	208	95	215	225	97	226	239	103	245	262
		60	103	170	175	106	180	187	110	193	203	112	205	216	117	224	239
		80	118	149	154	121	158	164	124	172	180	127	183	194	132	202	216
TWE1204*A, TWE1204*B	3200	40	99	203	210	102	214	222	106	229	240	109	241	254	115	261	279
		60	112	181	187	115	191	199	119	206	216	123	218	230	129	238	255
		80	126	158	164	129	169	175	133	183	192	136	195	206	142	215	230
	4000	40	91	222	229	94	234	243	98	250	262	101	264	278	106	286	306
		60	106	198	204	108	209	217	112	225	236	115	239	252	120	261	279
		80	120	173	179	123	184	192	126	200	210	129	214	226	134	236	252
	4800	40	86	239	246	88	251	261	92	269	282	94	284	299	99	307	329
		60	101	212	219	103	225	233	107	242	254	109	257	271	114	280	300
		80	116	186	192	118	198	206	121	215	226	124	230	243	129	253	271

Table 49. Steam heating coil capacity – air handler steam pressure (PSIG) (60Hz) (continued)

Unit Model No.	Airflow (CFM)	EAT (°F)	Steam Pressure (PSIG)														
			2 PSI			5 PSI			10 PSI			15 PSI			25 PSI		
			LAT	MBh	Cond. lb/hr	LAT	MBh	Cond. lb/hr	LAT	MBh	Cond. lb/hr	LAT	MBh	Cond. lb/hr	LAT	MBh	Cond. lb/hr
TWE1804*B	4800	40	97	295	304	100	310	322	104	332	348	107	350	369	113	379	406
		60	110	262	271	113	278	288	117	299	313	121	317	334	126	346	370
		80	124	230	237	127	245	254	131	266	279	134	284	299	140	313	334
	6000	40	90	322	332	92	339	352	96	363	380	99	383	404	104	415	444
		60	104	287	296	107	303	315	110	327	343	113	347	366	118	379	405
		80	119	251	259	121	268	278	125	291	305	128	310	328	133	342	366
	7200	40	84	346	356	87	364	378	90	390	408	93	411	434	97	446	477
		60	99	308	318	102	326	338	105	351	368	108	373	393	112	407	435
		80	115	270	278	117	287	299	120	313	327	123	334	352	127	368	394
TWE2404*B	6400	40	95	379	391	97	399	414	102	427	447	105	450	475	110	488	522
		60	109	337	348	111	357	371	115	384	403	119	408	430	124	445	476
		80	123	295	305	125	315	327	129	342	358	133	365	385	138	402	430
	8000	40	88	414	426	90	436	452	94	467	488	97	492	519	102	534	571
		60	102	368	380	105	390	405	108	420	440	111	446	470	116	487	521
		80	117	322	333	120	344	357	123	374	392	126	399	421	131	440	471
	9600	40	83	443	457	85	468	485	88	501	524	91	529	558	95	574	613
		60	98	395	407	100	418	434	103	451	473	106	479	505	110	524	560
		80	113	346	357	115	369	383	119	402	421	121	429	453	125	473	506

Notes:
1. Type NS Coil, 1 Row, 1" OD, SF Fins, 132 Fins per Foot.
2. SZVAV/2-Speed VFD available for 6–25 ton only.
3. LAT = Leaving Air Temperature (°F)
4. MBh Capacity= BTU/HR/1000
5. Cond. Lb/Hr = Condensate pound per hour

Table 50. Hot water heating coil capacity - air handler (60Hz)

Tons	Unit Model No.	Airflow (CFM)	Enter Air Temp (° F)	Entering Water Temperature (°F)								
				180								
				Water Temperature Drop (°F)								
				20			30			40		
				GPM	MBh	LAT	GPM	MBh	LAT	GPM	MBh	LAT
5	TWE0604*A, TWE0604*B	1600	40	10.9	106.1	101.0	6.6	96.5	96.0	4.5	87.4	90.0
			60	9.0	88.3	111.0	5.4	79.1	106.0	3.6	70.3	100.0
			80	7.2	70.6	121.0	4.2	61.8	116.0	2.7	53.4	111.0
		2000	40	12.3	119.8	95.0	7.4	108.6	90.0	5.0	97.9	851.0
			60	10.2	99.6	106.0	6.1	88.8	101.0	4.0	78.6	96.0
			80	8.1	79.5	117.0	4.7	69.2	112.0	3.0	59.6	107.0
		2400	40	13.5	132.0	91.0	8.1	119.2	86.0	5.5	107.1	811.0
			60	11.2	109.6	102.0	6.6	97.4	97.0	4.4	85.9	931.0
			80	9.0	87.4	114.0	5.2	75.7	109.0	3.3	64.9	105.0
6	TWE072*B	1920	40	15.4	150.3	112.5	9.4	137.6	106.4	6.4	124.9	100.2
			60	12.8	124.9	120.2	7.6	111.3	113.7	5.2	101.5	109.0
			80	10.2	99.6	128.0	6.0	87.8	122.4	3.9	76.1	116.7
		2400	40	17.0	165.9	104.0	10.4	152.3	98.0	7.1	139.2	93.0
			60	14.2	138.4	113.0	8.5	125.2	108.0	5.7	112.5	103.0
			80	11.4	111.1	123.0	6.7	98.3	118.0	4.4	86.1	113.0
		2880	40	18.7	182.5	98.7	11.5	168.4	94.1	7.7	150.3	88.3
			60	15.6	152.3	109.0	9.2	134.7	103.3	6.4	124.9	100.2
			80	12.5	122.0	119.2	7.2	105.4	113.9	4.7	91.7	109.5
7.5	TWE0904*A, TWE0904*B	2400	40	17.0	165.9	104.0	10.4	152.3	98.0	7.1	139.2	93.0
			60	14.2	138.4	113.0	8.5	125.2	108.0	5.7	112.5	103.0

Table 50. Hot water heating coil capacity - air handler (60Hz) (continued)

Tons	Unit Model No.	Airflow (CFM)	Enter Air Temp (° F)	Entering Water Temperature (°F)								
				180								
				Water Temperature Drop (°F)								
				20			30			40		
				GPM	MBh	LAT	GPM	MBh	LAT	GPM	MBh	LAT
			80	11.4	111.1	123.0	6.7	98.3	118.0	4.4	86.1	113.0
		3000	40	19.3	187.9	98.0	11.7	171.9	93.0	8.0	156.5	88.0
			60	16.1	156.7	108.0	9.6	141.1	103.0	6.4	126.3	991.0
			80	12.9	125.5	119.0	7.5	110.6	114.0	4.9	96.5	110.0
		3600	40	21.2	207.3	93.0	12.9	189.1	88.0	8.8	171.6	84.0
			60	17.7	172.7	104.0	10.6	155.0	100.0	7.1	138.3	95.0
			80	14.2	138.2	115.0	8.3	121.2	111.0	5.4	105.4	107.0
10	TWE1204*A, TWE1204*B	3200	40	24.5	239.1	109.0	14.3	210.0	100.0	9.1	178.7	91.0
			60	20.2	197.3	117.0	11.5	168.4	108.0	6.9	134.8	99.0
			80	15.9	155.6	125.0	8.6	126.1	116.0	4.0	78.7	103.0
		4000	40	27.8	271.7	103.0	16.2	237.5	95.0	10.3	201.9	86.0
			60	22.9	223.8	112.0	13.0	190.3	104.0	7.8	153.3	95.0
			80	18.1	176.2	121.0	9.7	142.6	113.0	5.0	97.3	102.0
		4800	40	30.7	300.0	98.0	17.8	261.3	90.0	11.3	221.7	82.0
			60	25.3	246.9	107.0	14.3	209.1	100.0	8.6	168.9	92.0
			80	19.9	194.0	117.0	10.7	156.7	110.0	5.6	110.2	101.0
15	TWE1804*B	4800	40	35.2	343.9	106.0	21.2	310.3	100.0	14.1	276.3	93.0
			60	29.3	285.7	115.0	17.2	252.7	108.0	11.2	218.5	102.0
			80	23.3	227.7	124.0	13.3	195.0	117.0	8.2	159.9	111.0
		6000	40	40.0	390.3	100.0	23.9	350.8	94.0	15.9	311.4	884.0
			60	33.3	323.9	110.0	19.5	285.3	104.0	12.6	246.2	98.0
			80	26.4	257.7	120.0	15.0	219.9	114.0	9.2	180.5	108.0
		7200	40	44.2	431.3	95.0	26.4	386.5	89.0	17.5	342.1	84.0
			60	36.6	357.6	106.0	21.4	313.9	100.0	13.8	270.6	95.0
			80	29.1	284.2	116.0	16.5	241.6	111.0	10.1	198.3	105.0
20	TWE2404*B	6400	40	46.8	456.2	106.0	28.4	416.5	100.0	19.3	376.7	94.0
			60	39.0	380.2	115.0	23.3	341.2	109.0	15.4	301.7	103.0
			80	31.2	304.5	124.0	18.2	266.0	118.0	11.6	227.0	113.0
		8000	40	53.0	517.5	100.0	32.1	470.9	94.0	21.7	424.5	89.0
			60	44.2	430.9	110.0	26.3	385.2	104.0	17.4	339.6	99.0
			80	35.3	344.6	120.0	20.5	299.8	115.0	13.0	255.2	109.0
		9600	40	58.6	572.0	94.0	35.4	519.1	90.0	23.9	466.8	85.0
			60	48.8	475.9	106.0	28.9	424.2	101.0	19.1	373.3	96.0
			80	39.0	380.2	116.0	22.5	329.6	112.0	14.3	280.0	107.0

Tons	Unit Model No.	Airflow (CFM)	Enter Air Temp (° F)	Entering Water Temperature (°F)								
				200								
				Water Temperature Drop (°F)								
				20			30			40		
				GPM	MBh	LAT	GPM	MBh	LAT	GPM	MBh	LAT
5	TWE0604*A, TWE0604*B	1600	40	12.9	124.9	112.0	7.9	115.4	106.0	5.5	106.3	101.0
			60	11.0	107.0	122.0	6.7	97.8	116.0	4.6	88.9	111.0
			80	9.2	89.1	131.0	5.5	80.2	126.0	3.7	71.7	121.0
		2000	40	4.5	141.3	105.0	8.9	130.1	100.0	6.1	119.4	95.0
			60	12.4	120.9	116.0	7.5	110.1	111.0	5.1	99.7	106.0
			80	10.4	100.6	126.0	6.2	90.2	122.0	4.1	80.3	117.0
		2400	40	6.0	155.8	100.0	9.8	143.1	95.0	6.7	131.0	90.0
			60	3.7	133.3	111.0	8.3	120.9	106.0	5.6	109.2	102.0
			80	11.4	110.8	123.0	6.8	98.9	118.0	4.5	87.8	114.0
6	TWE072*B	1920	40	17.9	174.7	124.3	11.2	164.0	119.1	7.9	154.2	114.4

Table 50. Hot water heating coil capacity - air handler (60Hz) (continued)

Tons	Unit Model No.	Airflow (CFM)	Enter Air Temp (° F)	Entering Water Temperature (°F)								
				200								
				Water Temperature Drop (°F)								
				20			30			40		
				GPM	MBh	LAT	GPM	MBh	LAT	GPM	MBh	LAT
			60	15.6	152.3	133.4	9.6	140.5	127.8	6.5	126.9	121.2
			80	13.0	126.9	141.2	8.0	117.1	136.5	5.4	105.4	130.8
		2400	40	20.0	194.8	115.0	12.4	181.2	110.0	8.6	168.2	105.0
			60	17.2	167.1	124.0	10.6	153.9	119.0	7.2	141.2	114.0
			80	14.4	139.6	134.0	8.7	126.8	129.0	5.9	114.3	124.0
		2880	40	21.9	213.7	108.7	13.7	200.6	104.5	9.6	187.4	100.2
			60	19.0	185.4	119.6	11.7	171.3	115.1	8.0	156.2	110.2
			80	15.8	154.2	129.6	9.7	142.0	125.7	6.5	126.9	120.8
7.5	TWE0904*A, TWE0904*B	2400	40	20.0	194.8	115.0	12.4	181.2	110.0	8.6	168.2	105.0
			60	17.2	167.1	124.0	10.6	153.9	119.0	7.2	141.2	114.0
			80	14.4	139.6	134.0	8.7	126.8	129.0	5.9	114.3	124.0
		3000	40	22.7	220.9	108.0	14.0	204.9	103.0	9.7	189.6	98.0
			60	9.5	189.4	118.0	11.9	173.9	113.0	8.2	159.0	109.0
			80	16.3	158.1	129.0	9.8	143.0	124.0	6.6	128.5	119.0
		3600	40	25.1	244.0	102.0	15.5	225.7	981.0	0.7	208.4	93.0
			60	21.5	209.1	113.0	13.1	191.4	109.0	9.0	174.4	105.0
			80	17.9	174.3	125.0	10.8	157.1	120.0	7.2	140.9	116.0
10	TWE1204*A, TWE1204*B	3200	40	29.3	284.7	122.0	17.6	256.8	114.0	11.7	228.6	106.0
			60	25.0	242.6	130.0	14.7	215.2	122.0	9.6	186.9	114.0
			80	20.6	200.6	138.0	11.9	173.6	130.0	7.4	144.3	122.0
		4000	40	33.4	324.1	115.0	19.9	291.0	107.0	13.3	258.2	99.0
			60	28.4	275.8	124.0	16.7	243.6	116.0	10.8	211.0	109.0
			80	23.4	227.7	132.0	13.4	196.2	125.0	8.4	163.2	118.0
		4800	40	36.9	358.3	109.0	22.0	320.7	102.0	14.6	283.7	94.0
			60	31.4	304.7	118.0	18.4	268.1	111.0	11.9	231.6	104.0
			80	25.9	251.3	128.0	14.8	215.6	121.0	9.2	179.4	114.0
15	TWE1804*B	4800	40	41.8	406.0	118.0	25.6	373.4	112.0	17.5	341.0	105.0
			60	35.8	347.5	127.0	21.6	315.4	121.0	14.6	283.4	114.0
			80	29.8	289.1	135.0	17.7	257.6	129.0	11.6	225.7	123.0
		6000	40	7.5	461.4	111.0	29.0	423.0	105.0	19.8	385.0	99.0
			60	40.6	394.6	121.0	24.5	356.9	115.0	16.4	319.6	109.0
			80	33.8	327.9	130.0	19.9	291.0	125.0	13.1	254.3	119.0
		7200	40	52.5	510.4	105.0	32.0	466.7	100.0	21.8	423.8	94.0
			60	44.9	436.3	116.0	27.0	393.5	110.0	18.0	351.4	105.0
			80	37.3	362.2	126.0	22.0	320.5	121.0	14.3	279.5	116.0
20	TWE2404*B	6400	40	55.2	536.5	117.0	34.1	497.8	112.0	23.6	459.4	106.0
			60	47.4	460.2	126.0	28.9	422.1	121.0	19.7	384.2	115.0
			80	39.5	384.0	135.0	23.8	346.5	130.0	15.9	308.9	124.0
		8000	40	62.7	609.2	110.0	38.6	563.8	105.0	26.6	518.8	100.0
			60	53.8	522.2	120.0	32.7	477.6	115.0	22.2	433.3	110.0
			80	44.8	435.4	130.0	26.8	391.5	125.0	17.9	347.9	120.0
		9600	40	69.4	673.9	105.0	42.7	622.3	100.0	29.3	571.5	95.0
			60	59.4	577.4	115.0	36.1	526.8	111.0	24.5	476.7	106.0
			80	49.5	481.0	126.0	29.6	431.4	121.0	19.6	382.6	117.0

Table 50. Hot water heating coil capacity - air handler (60Hz) (continued)

Tons	Unit Model No.	Airflow (CFM)	Enter Air Temp (° F)	Entering Water Temperature (°F)								
				210								
				Water Temperature Drop (°F)								
				20			30			40		
				GPM	MBh	LAT	GPM	MBh	LAT	GPM	MBh	LAT
5	TWE0604*A, TWE0604*B	1600	40	13.9	134.3	117.0	8.6	124.8	112.0	6.0	115.8	107.0
			60	12.0	116.3	127.0	7.4	107.1	122.0	5.1	98.3	117.0
			80	10.2	98.4	137.0	6.1	89.5	132.0	4.2	80.9	127.0
		2000	40	15.7	152.0	110.0	9.7	140.9	105.0	6.7	130.2	100.0
			60	13.6	131.6	121.0	8.3	120.7	116.0	5.7	110.5	111.0
			80	11.5	111.2	131.0	6.9	100.7	126.0	4.7	90.7	122.0
		2400	40	17.3	167.7	104.0	10.6	155.0	99.0	7.4	142.9	95.0
			60	15.0	145.1	116.0	9.1	132.8	111.0	6.2	121.0	106.0
			80	12.6	122.6	127.0	7.6	110.6	122.0	5.1	99.3	118.0
6	TWE072*B	1920	40	19.5	190.3	131.8	12.0	175.7	124.7	8.5	165.9	120.0
			60	16.8	164.0	139.1	10.4	152.3	133.4	7.3	142.5	128.7
			80	14.5	141.5	148.2	8.8	128.8	142.1	5.9	115.2	135.5
		2400	40	21.6	209.2	120.0	13.4	195.7	115.0	9.4	182.7	110.0
			60	18.7	181.5	130.0	11.6	168.3	125.0	8.0	155.6	120.0
			80	15.9	153.9	139.0	9.7	141.0	134.0	6.6	128.6	129.0
		2880	40	23.9	233.3	115.0	14.7	215.2	109.2	10.3	201.1	104.6
			60	20.6	201.1	124.6	12.7	185.9	119.8	8.8	171.8	115.2
			80	17.7	172.8	135.5	10.6	155.2	129.9	7.1	138.6	124.6
7.5	TWE0904*A, TWE0904*B	2400	40	21.6	209.2	120.0	13.4	195.7	115.0	9.4	182.7	110.0
			60	18.7	181.5	130.0	11.6	168.3	125.0	8.0	155.6	120.0
			80	15.9	153.9	139.0	9.7	141.0	134.0	6.6	28.6	129.0
		3000	40	24.5	237.4	113.0	15.2	221.5	108.0	10.6	206.2	103.0
			60	21.2	205.8	123.0	13.1	190.3	118.0	9.0	175.4	114.0
			80	18.0	174.4	134.0	10.9	159.2	129.0	7.4	144.7	124.0
		3600	40	27.1	262.3	107.0	16.8	244.1	102.0	11.7	226.8	98.0
			60	23.4	227.3	118.0	14.4	209.6	114.0	9.9	192.6	109.0
			80	19.8	192.4	129.0	12.0	175.2	125.0	8.2	158.7	121.0
10	TWE1204*A, TWE1204*B	3200	40	31.7	307.4	129.0	19.2	279.9	121.0	13.0	252.6	113.0
			60	27.4	265.1	136.0	16.4	238.2	129.0	10.9	211.0	121.0
			80	23.0	223.0	144.0	13.5	196.5	137.0	8.7	169.1	129.0
		4000	40	36.1	350.2	121.0	21.8	317.6	113.0	14.7	285.5	106.0
			60	31.1	301.7	130.0	18.5	269.9	122.0	12.3	238.2	115.0
			80	26.1	253.4	138.0	15.3	222.3	131.0	9.8	190.8	124.0
		4800	40	40.0	387.4	114.0	24.1	350.3	107.0	16.2	313.9	100.0
			60	34.4	333.6	124.0	20.4	297.3	117.0	13.5	261.7	110.0
			80	28.9	279.9	134.0	16.8	244.6	127.0	10.8	209.5	120.0
15	TWE1804*B	4800	40	45.1	437.0	124.0	27.8	404.7	118.0	19.2	372.9	112.0
			60	39.0	378.3	133.0	23.8	346.6	127.0	16.2	315.2	120.0
			80	33.0	319.8	141.0	19.8	288.6	135.0	13.3	257.5	129.0
		6000	40	51.3	496.8	116.0	31.5	458.9	110.0	21.7	421.5	105.0
			60	44.4	429.9	126.0	27.0	392.6	120.0	18.3	355.8	115.0
			80	37.5	363.0	136.0	22.4	326.5	130.0	14.9	290.3	125.0
		7200	40	56.7	549.8	110.0	34.8	506.7	105.0	23.9	464.3	99.0
			60	49.1	475.5	121.0	29.8	433.1	115.0	20.2	391.5	110.0
			80	41.4	401.3	131.0	24.7	359.8	126.0	16.4	319.0	121.0
20	TWE2404*B	6400	40	59.5	576.5	123.0	37.0	538.3	118.0	25.8	500.5	112.0
			60	51.6	500.0	132.0	31.8	462.4	127.0	21.9	425.0	121.0
			80	43.7	423.7	141.0	26.6	386.6	136.0	18.0	349.7	130.0
		8000	40	67.6	654.9	115.0	41.9	610.0	110.0	29.1	565.7	105.0

Table 50. Hot water heating coil capacity - air handler (60Hz) (continued)

Tons	Unit Model No.	Airflow (CFM)	Enter Air Temp (° F)	Entering Water Temperature (°F)								
				210								
				Water Temperature Drop (°F)								
				20			30			40		
				GPM	MBh	LAT	GPM	MBh	LAT	GPM	MBh	LAT
			60	58.6	567.8	125.0	36.0	523.6	120.0	24.7	479.9	115.0
			80	49.6	480.7	135.0	30.0	437.3	130.0	20.3	394.2	125.0
		9600	40	74.8	724.6	110.0	46.3	673.8	105.0	32.1	623.6	100.0
			60	64.8	628.0	120.0	39.7	578.0	115.0	27.2	528.4	111.0
			80	54.8	531.4	131.0	33.1	482.2	126.0	22.3	433.5	122.0

Notes:

1. SZVAV/2-Speed VFD available for 6–25 ton only.
2. GPM = Gallons Per Minute
3. MBh Capacity: BTU/HR/1000
4. LAT = Leaving Air Temperature (°F)

Table 51. Hot water heating coil - water side pressure drop @ 180°F entering water temperature - air handler (60Hz)

Tons	Unit Model No.	Gallons Per Minute (GPM)																		
		2	4	6	8	10	12	14	16	18	20	22	24	26	28	30	32	34	36	38
		Pressure Drop (Ft. of Water)																		
5	TWE0604*A/B	0.02	0.07	0.15	0.26	0.40	0.56	0.75	0.97	1.22	1.49	1.78	-	-	-	-	-	-	-	-
6	TWE0724*B	-	-	0.06	0.11	0.16	0.23	0.30	0.39	0.48	0.58	0.70	0.82	0.95	1.09	1.24	1.40	1.57	-	-
7.5	TWE0904*A,B	-	-	0.06	0.11	0.16	0.23	0.30	0.39	0.48	0.58	0.70	0.82	0.95	1.09	1.24	1.40	1.57	-	-
10	TWE1204*A,B	-	-	-	0.06	0.09	0.13	0.17	0.22	0.27	0.33	0.39	0.46	0.54	0.62	0.70	0.79	0.89	0.99	1.10
15	TWE1804*B	-	-	-	-	0.11	0.15	0.20	0.26	0.32	0.39	0.47	0.55	0.64	0.73	0.83	0.94	1.05	1.17	1.29
20	TWE2404*B	-	-	-	-	-	0.17	0.23	0.30	0.37	0.45	0.53	0.63	0.72	0.83	0.94	1.06	1.19	1.32	1.46
Tons	Unit Model No.	Gallons Per Minute (GPM)																		
		40	42	44	46	48	50	52	54	56	58	60	62	64	66	68	70	72	74	76
		Pressure Drop (Ft. of Water)																		
5	TWE0604*A/B	-	-	-	-	-	-	-	-	-	-	-	-	-	-	-	-	-	-	-
6	TWE0724*B	-	-	-	-	-	-	-	-	-	-	-	-	-	-	-	-	-	-	-
7.5	TWE0904*A,B	-	-	-	-	-	-	-	-	-	-	-	-	-	-	-	-	-	-	-
10	TWE1204*A,B	1.21	1.32	1.44	1.57	1.70	1.84	-	-	-	-	-	-	-	-	-	-	-	-	-
15	TWE1804*B	1.42	1.56	1.70	1.85	2.00	2.16	2.33	2.50	2.67	2.86	3.04	3.24	3.44	3.64	3.85	4.07	-	-	-
20	TWE2404*B	1.61	1.76	1.92	2.09	2.26	2.44	2.63	2.82	3.02	3.22	3.43	3.65	3.87	4.10	4.34	4.58	4.83	5.08	5.34

Note: SZVAV/2-Speed VFD available for 6-25 ton only.

Zone Controls

Zone Sensors

Zone Sensors are the building occupant's comfort control devices. Zone sensors are required for SZVAV applications. The following zone sensor options are available for units with Symbio 700 control.

Manual Changeover	Heat, Cool or Off System Switch. Fan Auto or Off Switch. One temperature setpoint lever.
Manual/Automatic Changeover	Auto, Heat, Cool or Off System Switch. Fan Auto or Off Switch. Two temperature setpoint levers.
Manual/Automatic Changeover	Auto, Heat, Cool or Off System Switch. Fan Auto or Off Switch. Two temperature setpoint levers.
Integrated Comfort™ System	Sensor(s) available with optional temperature adjustment and override buttons to provide central control through a Trane Integrated Comfort™ system.
Remote Sensor	Sensor(s) available for all zone sensors to provide remote sensing capabilities.

Conventional Thermostats

Note: *All thermostats may be used with Symbio 700 units.*

Non-Programmable Thermostats	
TCONT102* (1H/1C) Common terminal not required	Auto-changeover Backlit Display and Keys Filter Reminder Keypad Lock
TCONT103* (2H/1C) Common terminal required	Auto-changeover Backlit Display & Keys Filter Reminder Keypad Lock Outdoor Temp Sensor Available
TCONT402* (3H/2C) Common terminal required	Auto-changeover Backlit Display & Keys Filter Reminder Keypad Lock Outdoor Temp Sensor Included
Programmable Thermostats	
TCONT202* (1H/1C) Common terminal preferred, not required	5/2 or 5/1/1 Programming Actual and Setpoint temps displayed simultaneously
TCONT203* (4H/2C) Common terminal preferred, not required	5/2 or 5/1/1 Programming Actual and Setpoint temps displayed simultaneously
TCONT302* (4H/2C) Common terminal preferred, not required	Interactive touchscreen Large display Real time clock
TCONT303* (4H/2C) Humidity Sensor Common terminal preferred, not required	Interactive touchscreen Large display Real time clock Built-in humidity sensor

AIRE Y CLIMA ESPECIALIZADO

Electrical Data

Heat Pump Condenser

Table 52. Electrical characteristics — compressor and condenser fan motors — heat pumps — 60Hz

Tons	Unit Model Number	Compressor Motors						Condenser Fan Motor				
		Volts	Phase	Compressor 1 Amps		Compressor 2 Amps		No.	Volts	Phase	Amps	
				RLA	LRA	RLA	LRA				FLA (Ea.)	LRA (Ea.)
6	TWA07243A	208-230	3	22.4	149	N/A	N/A	1	208-230	3	2.3	8.4
	TWA07244A	460	3	10.6	75	N/A	N/A	1	460	3	1.1	4.2
	TWA0724WA	575	3	7.7	54	N/A	N/A	1	575	3	1.0	3.6
6	TWA07243D	208-230	3	10.4	73	10.4	73	1	208-230	3	2.3	8.4
	TWA07244D	460	3	5.8	38	5.8	38	1	460	3	1.1	4.2
	TWA0724WD	575	3	3.8	37	3.8	37	1	575	3	1.0	3.6
7.5	TWA09043A	208-230	3	26.9	164	N/A	N/A	1	208-230	3	2.3	8.4
	TWA09044A	460	3	12.0	94	N/A	N/A	1	460	3	1.1	4.2
	TWA0904WA	575	3	9.0	65	N/A	N/A	1	575	3	1.0	3.6
7.5	TWA09043D	208-230	3	13.1	83	13.1	83	1	208-230	3	2.3	8.4
	TWA09044D	460	3	6.1	41	6.1	41	1	460	3	1.1	4.2
	TWA0904WD	575	3	4.4	33	4.4	33	1	575	3	1.0	3.6
10	TWA12043A	208-230	3	32.6	240	N/A	N/A	1	208-230	3	4.3	19.4
	TWA12044A	460	3	14.8	130	N/A	N/A	1	460	3	2.2	10.1
	TWA1204WA	575	3	11.1	94	N/A	N/A	1	575	3	1.8	8.0
10	TWA12043D	208-230	3	16.5	110	16.5	110	1	208-230	3	4.3	19.4
	TWA12044D	460	3	7.2	52	7.2	52	1	460	3	2.2	10.1
	TWA1204WD	575	3	5.5	39	5.5	39	1	575	3	1.8	8.0
15	TWA18043D	208-230	3	25.0	164	25.0	164	2	208-230	3	4.3	19.4
	TWA18044D	460	3	12.2	100	12.2	100	2	460	3	2.2	10.1
	TWA1804WD	575	3	9.2	78	9.2	78	2	575	3	1.8	8.0
20	TWA24043D	208-230	3	34.7	240	34.7	240	2	208-230	3	4.3	19.4
	TWA24044D	460	3	16.0	140	16.0	104	2	460	3	2.2	10.1
	TWA2404WD	575	3	12.9	108	12.9	108	2	575	3	1.8	8.0

Note: Electrical characteristics reflect nameplate values and are calculated in accordance with cULus specifications.

Table 53. Unit wiring — heat pumps — 60Hz

Tons	Unit Model Number	Volts	Minimum Circuit Ampacity	Maximum Fuse or Circuit Breaker Size
6	TWA07243A	187-253	30	50
	TWA07244A	414-506	14	20
	TWA0724WA	518-632	11	15
6	TWA07243D	187-253	26	35
	TWA07244D	414-506	14	15
	TWA0724WD	518-632	10	15
7.5	TWA09043A	187-253	36	60
	TWA09044A	414-506	16	25
	TWA0904WA	518-632	12	20
7.5	TWA09043D	187-253	32	40
	TWA09044D	414-506	15	20
	TWA0904WD	518-632	11	15
10	TWA12043A	187-253	45	70
	TWA12044A	414-506	21	35

Table 53. Unit wiring — heat pumps — 60Hz (continued)

Tons	Unit Model Number	Volts	Minimum Circuit Ampacity	Maximum Fuse or Circuit Breaker Size
	TWA1204WA	518-632	16	25
10	TWA12043D	187-253	42	50
	TWA12044D	414-506	18	25
	TWA1204WD	518-632	14	15
15	TWA18043D	187-253	65	80
	TWA18044D	414-506	32	40
	TWA1804WD	518-632	24	30
20	TWA24043D	187-253	87	110
	TWA24044D	414-506	40	50
	TWA2404WD	518-632	33	45

Air Handler

Table 54. Voltage operating range (all air handlers)

Model Number: Digit 8	Electrical Characteristics	Unit Operating Voltage Range
1	208-230/60/1	187-253
3	208-230/60/3	187-253
4	460/60/3	414-506
W	575/60/3	518-632

Table 55. Electrical characteristics — 5–20 ton standard motor — 60 Hz constant volume air handler

Tons	Unit Model Number	Standard Evaporator Fan Motor							
		No.	Volts	Phase	HP	Amps		MCA	MOP
						FLA	LRA		
5	TWE06041A/B	1	208-230	1	0.75	6.0	43.0	8	15
	TWE06043A/B	1	208-230	3	0.75	2.8	13.0	4	15
	TWE06044A/B	1	460	3	0.75	1.4	6.0	2	15
	TWE0604WA	1	575	3	0.75	1.4	5.0	2	15
7.5	TWE09041A/B	1	208-230	1	1.5	7.5	53.0	9	15
10	TWE12041A/B	1	208-230	1	2	10.5	48.0	13.1	20

AIRE ACLIMA ESPECIALIZADO

Table 56. Electrical characteristics — 5–20 ton high static motor — 60 Hz constant volume air handler

Tons	Unit Model Number	High Static Evaporator Fan Motor							
		No.	Volts	Phase	HP	Amps		MCA	MOP
						FLA	LRA		
5	TWE06041A/B	1	208-230	1	1.5	7.5	53.0	9	15
	TWE06043A/B	1	208-230	3	1.5	6.4	33.0	8	15
	TWE06044A/B	1	460	3	1.5	3.0	17.0	4	15
	TWE0604WA	1	575	3	1.5	1.9	14.0	2	15
7.5	TWE09041A/B	1	208-230	1	2	10.5	48.0	13	20

AIRE Y CLIMA ESPECIALIZADO

Table 57. Electrical characteristics — standard and oversized motors — 6–20 ton SZVAV and 2-Speed VFD air handler — 60 Hz

Tons	Unit Model Number	Standard Evaporator Fan Motor								Oversized Evaporator Fan Motor							
		No.	Volts	Phase	HP	Amps		MCA	MOP	No.	Volts	Phase	HP	Amps		MCA	MOP
						FLA	LRA							FLA	LRA		
6	TWE07243B	1	208-230	3	2	6.8	54.0	8	15	1	208-230	3	3	10.0	74.0	13	20
	TWE07244B	1	460	3	2	3.3	27.2	4	15	1	460	3	3	4.9	37.0	6	15
	TWE0724WB	1	575	3	2	2.5	18.0	3	15	1	575	3	3	3.9	35.0	5	15
7.5	TWE09043A/B	1	208-230	3	2	6.8	54.0	8	15	1	208-230	3	3	10.0	74.0	13	20
	TWE09044A/B	1	460	3	2	3.3	27.2	4	15	1	460	3	3	4.9	37.0	6	15
	TWE0904WA/B	1	575	3	2	2.5	18.0	3	15	1	575	3	3	3.9	35.0	5	15
10	TWE12043A/B	1	208-230	3	2	6.8	54.0	8	15	1	208-230	3	3	10.0	74.0	13	20
	TWE12044A/B	1	460	3	2	3.3	27.0	4	15	1	460	3	3	4.9	37.0	6	15
	TWE1204WA/B	1	575	3	2	2.5	18.0	3	15	1	575	3	3	3.9	35.0	5	15
15	TWE18043B	1	208-230	3	3	10.0	74.0	13	20	1	208-230	3	5	15.1	105.0	19	30
	TWE18044B	1	460	3	3	4.9	37.0	6	15	1	460	3	5	7.1	52.0	9	15
	TWE1804WB	1	575	3	3	3.9	35.0	5	15	1	575	3	5	5.7	46.0	7	15
20	TWE24043B	1	208-230	3	5	15.1	105.0	19	30	1	208-230	3	7.5	22.8	141.0	29	50
	TWE24044B	1	460	3	5	7.1	52.0	9	15	1	460	3	7.5	10.0	62.0	12	20
	TWE2404WB	1	575	3	5	5.7	46.0	7	15	1	575	3	7.5	8.2	60.0	10	15

Table 58. Unit wiring with electric heat (single point connection) — 5-20 ton constant volume air handlers — 60 Hz

Tons	Used With	Heater Model Number	Heater kW Rating	Unit Power Supply	Control Stages	Standard Evap Motor		High Static Evap Motor	
						MCA	MOP	MCA	MOP
5	TWE06041A/B	BAYHTRN106*	4.33	208/1/60	1	34	35	35	40
		BAYHTRR112*	8.65		1	59	60	61	70
		BAYHTRS117*	12.98		1	86	90	87	90
		BAYHTRR123*	17.31		2	111	125	113	125
5	TWE06041A/B	BAYHTRN106*	5.76	230/1/60	1	38	40	39	40
		BAYHTRR112*	11.52		1	68	70	69	70
		BAYHTRS117*	17.28		1	98	100	99	100
		BAYHTRR123*	23.04		2	128	150	129	150
5	TWE06043A/B	BAYHTRN305*	3.76	208/3/60	1	17	20	21	25
		BAYHTRR310*	7.48		1	29	30	34	35
		BAYHTRR315*	11.24		1	43	45	47	50
		BAYHTRN325*	18.72		2	69	70	73	80
5	TWE06043A/B	BAYHTRN305*	5	230/3/60	1	19	20	23	25
		BAYHTRR310*	9.96		1	33	35	38	40
		BAYHTRR315*	14.96		1	49	50	53	60
		BAYHTRN325*	24.92		2	79	80	83	90
5	TWE06044A/B	BAYHTRN405*	5	460/3/60	1	9	15	11	15
		BAYHTRR410*	9.96		1	17	20	19	20
		BAYHTRR415*	14.96		1	24	25	26	30
		BAYHTRN425*	24.92		2	39	40	41	45
5	TWE0604WA	BAYHTRNW05*	5	575/3/60	1	8	15	8	15
		BAYHTRRW10*	9.96		1	14	15	14	15
		BAYHTRRW15*	14.96		1	20	20	20	25
		BAYHTRNW25*	24.92		2	32	35	32	35
7.5	TWE09041A/B	BAYHTRN106*	4.33	208/1/60	1	35	40	39	40
		BAYHTRR112*	8.65		1	61	70	65	70

Table 58. Unit wiring with electric heat (single point connection) — 5-20 ton constant volume air handlers — 60 Hz (continued)

Tons	Used With	Heater Model Number	Heater kW Rating	Unit Power Supply	Control Stages	Standard Evap Motor		High Static Evap Motor	
						MCA	MOP	MCA	MOP
		BAYHTRS117*	12.98		1	87	90	91	100
		BAYHTRR123*	17.31		2	113	125	117	125
		BAYHTRN129*	21.63		2	139	150	143	150
7.5	TWE09041A/B	BAYHTRN106*	5.76	230/1/60	1	39	40	43	45
		BAYHTRR112*	11.52		1	69	70	73	80
		BAYHTRS117*	17.28		1	99	100	103	110
		BAYHTRR123*	23.04		2	129	150	133	150
		BAYHTRN129*	28.8		2	159	175	163	175
10	TWE12041A/B	BAYHTRN106*	4.33	208/1/60	1	37	40	N/A	N/A
		BAYHTRR112*	8.65		1	63	70	N/A	N/A
		BAYHTRS117*	12.98		1	89	90	N/A	N/A
		BAYHTRR123*	17.31		2	115	125	N/A	N/A
		BAYHTRN129*	21.63		2	141	150	N/A	N/A
10	TWE12041A/B	BAYHTRN106*	5.76	230/1/60	1	41	45	N/A	N/A
		BAYHTRR112*	11.52		1	71	80	N/A	N/A
		BAYHTRS117*	17.28		1	101	110	N/A	N/A
		BAYHTRR123*	23.04		2	131	150	N/A	N/A
		BAYHTRN129*	28.8		2	161	175	N/A	N/A

Table 59. Unit wiring with electric heat (single point connection) — 6-20 ton SZVAV and 2-Speed VFD air handlers — 60 Hz

Tons	Used With	Heater Model Number	Heater KW Rating	Unit Power Supply	Control Stages	MCA	Maximum Fuse or Circuit Breaker Size
6	TWE07243*****BC0, D0	BAYHTRN305*	3.76	208/3/60	1	22	25
		BAYHTRR310*	7.48		1	34	35
		BAYHTRR315*	11.24		1	48	50
		BAYHTRN325*	18.72		2	74	80
6	TWE07243*****BC0, D0	BAYHTRN305*	5.00	230/3/60	1	24	25
		BAYHTRR310*	9.96		1	38	40
		BAYHTRR315*	14.96		1	54	60
		BAYHTRN325*	24.92		2	84	90
6	TWE07243*****BC4, D4	BAYHTRN305*	3.76	208/3/60	1	26	30
		BAYHTRR310*	7.48		1	38	40
		BAYHTRR315*	11.24		1	52	60
		BAYHTRN325*	18.72		2	78	80
6	TWE07243*****BC4, D4	BAYHTRN305*	5.00	230/3/60	1	28	30
		BAYHTRR310*	9.96		1	42	45
		BAYHTRR315*	14.96		1	58	60
		BAYHTRN325*	24.92		2	88	90
6	TWE07244*****BC0, D0	BAYHTRN405*	5.00	460/3/60	1	12	15
		BAYHTRR410*	9.96		1	19	20
		BAYHTRR415*	14.96		1	27	30
		BAYHTRN425*	24.92		2	42	45
6	TWE07244*****BC4, D4	BAYHTRN405*	5.00	460/3/60	1	14	15
		BAYHTRR410*	9.96		1	21	25
		BAYHTRR415*	14.96		1	29	30
		BAYHTRN425*	24.92		2	44	45

Table 59. Unit wiring with electric heat (single point connection) — 6-20 ton SZVAV and 2-Speed VFD air handlers — 60 Hz (continued)

Tons	Used With	Heater Model Number	Heater KW Rating	Unit Power Supply	Control Stages	MCA	Maximum Fuse or Circuit Breaker Size
6	TWE0724W*****BC0, D0	BAYHTRNW05*	5.00	575/3/60	1	9	15
		BAYHTRRW10*	9.96		1	15	20
		BAYHTRRW15*	14.96		1	21	25
		BAYHTRNW25*	24.92		2	33	35
6	TWE0724W*****BC4, D4	BAYHTRNW05*	5.00	575/3/60	1	11	15
		BAYHTRRW10*	9.96		1	17	20
		BAYHTRRW15*	14.96		1	23	25
		BAYHTRNW25*	24.92		2	35	35
7.5	TWE09043*****BC0, D0	BAYHTRN305*	3.76	208/3/60	1	22	25
		BAYHTRR310*	7.48		1	34	35
		BAYHTRR315*	11.24		1	48	50
		BAYHTRN325*	18.72		2	74	80
		BAYHTRN335*	26.20		2	100	100
7.5	TWE09043*****BC0, D0	BAYHTRN305*	5.00	230/3/60	1	24	25
		BAYHTRR310*	9.96		1	38	40
		BAYHTRR315*	14.96		1	54	60
		BAYHTRN325*	24.92		2	84	90
		BAYHTRN335*	34.88		2	113	125
7.5	TWE09043*****BC4, D4	BAYHTRN305*	3.76	208/3/60	1	26	30
		BAYHTRR310*	7.48		1	38	40
		BAYHTRR315*	11.24		1	52	60
		BAYHTRN325*	18.72		2	78	80
		BAYHTRN335*	26.20		2	104	110
7.5	TWE09043*****BC4, D4	BAYHTRN305*	5.00	230/3/60	1	28	30
		BAYHTRR310*	9.96		1	42	45
		BAYHTRR315*	14.96		1	58	60
		BAYHTRN325*	24.92		2	88	90
		BAYHTRN335*	34.88		2	118	125
7.5	TWE09044*****BC0, D0	BAYHTRN405*	5.00	460/3/60	1	12	15
		BAYHTRR410*	9.96		1	19	20
		BAYHTRR415*	14.96		1	27	30
		BAYHTRN425*	24.92		2	42	45
		BAYHTRN435*	34.88		2	57	60
7.5	TWE09044*****BC4, D4	BAYHTRN405*	5.00	460/3/60	1	14	15
		BAYHTRR410*	9.96		1	21	25
		BAYHTRR415*	14.96		1	29	30
		BAYHTRN425*	24.92		2	44	45
		BAYHTRN435*	34.88		2	59	60
7.5	TWE0904W*****BC0, D0	BAYHTRNW05*	5.00	575/3/60	1	9	15
		BAYHTRRW10*	9.96		1	15	20
		BAYHTRRW15*	14.96		1	21	25
		BAYHTRNW25*	24.92		2	33	35
		BAYHTRNW35*	34.88		2	45	50
7.5	TWE0904W*****BC4, D4	BAYHTRNW05*	5.00	575/3/60	1	11	15
		BAYHTRRW10*	9.96		1	17	20
		BAYHTRRW15*	14.96		1	23	25
		BAYHTRNW25*	24.92		2	35	35

Table 59. Unit wiring with electric heat (single point connection) — 6-20 ton SZVAV and 2-Speed VFD air handlers — 60 Hz (continued)

Tons	Used With	Heater Model Number	Heater KW Rating	Unit Power Supply	Control Stages	MCA	Maximum Fuse or Circuit Breaker Size
		BAYHTRNW35*	34.88		2	47	50
10	TWE12043*****BC0, D0	BAYHTRN305*	3.76	208/3/60	1	22	25
		BAYHTRR310*	7.48		1	34	35
		BAYHTRR315*	11.24		1	48	50
		BAYHTRN325*	18.72		2	74	80
		BAYHTRN335*	26.20		2	100	100
10	TWE12043*****BC0, D0	BAYHTRN305*	5.00	230/3/60	1	24	25
		BAYHTRR310*	9.96		1	38	40
		BAYHTRR315*	14.96		1	54	60
		BAYHTRN325*	24.92		2	84	90
		BAYHTRN335*	34.88		2	113	125
10	TWE12043*****BC4, D4	BAYHTRN305*	3.76	208/3/60	1	26	30
		BAYHTRR310*	7.48		1	38	40
		BAYHTRR315*	11.24		1	52	60
		BAYHTRN325*	18.72		2	78	80
		BAYHTRN335*	26.20		2	104	110
10	TWE12043*****BC4, D4	BAYHTRN305*	5.00	230/3/60	1	28	30
		BAYHTRR310*	9.96		1	42	45
		BAYHTRR315*	14.96		1	58	60
		BAYHTRN325*	24.92		2	88	90
		BAYHTRN335*	34.88		2	118	125
10	TWE12044*****BC0, D0	BAYHTRN405*	5.00	460/3/60	1	12	15
		BAYHTRR410*	9.96		1	19	20
		BAYHTRR415*	14.96		1	27	30
		BAYHTRN425*	24.92		2	42	45
		BAYHTRN435*	34.88		2	57	60
10	TWE12044*****BC4, D4	BAYHTRN405*	5.00	460/3/60	1	14	15
		BAYHTRR410*	9.96		1	21	25
		BAYHTRR415*	14.96		1	29	30
		BAYHTRN425*	24.92		2	44	45
		BAYHTRN435*	34.88		2	59	60
10	TWE1204W*****BC0, D0	BAYHTRNW05*	5.00	575/3/60	1	9	15
		BAYHTRRW10*	9.96		1	15	20
		BAYHTRRW15*	14.96		1	21	25
		BAYHTRNW25*	24.92		2	33	35
		BAYHTRNW35*	34.88		2	45	50
10	TWE1204W*****BC4, D4	BAYHTRNW05*	5.00	575/3/60	1	11	15
		BAYHTRRW10*	9.96		1	17	20
		BAYHTRRW15*	14.96		1	23	25
		BAYHTRNW25*	24.92		2	35	35
		BAYHTRNW35*	34.88		2	47	50
15	TWE18043*****BC0, D0	BAYHTRP310*	7.51	208/3/60	1	39	40
		BAYHTRP320*	14.96		1	64	70
		BAYHTRP330*	22.47		2	91	100
		BAYHTRP350*	37.44		2	143	150
15	TWE18043*****BC0, D0	BAYHTRP310*	10.00	230/3/60	1	43	45
		BAYHTRP320*	19.92		1	72	80

Table 59. Unit wiring with electric heat (single point connection) — 6-20 ton SZVAV and 2-Speed VFD air handlers — 60 Hz (continued)

Tons	Used With	Heater Model Number	Heater KW Rating	Unit Power Supply	Control Stages	MCA	Maximum Fuse or Circuit Breaker Size
		BAYHTRP330*	29.92		2	103	110
		BAYHTRP350*	49.84		2	163	175
15	TWE18043*****BC4, D4	BAYHTRP310*	7.51	208/3/60	1	45	50
		BAYHTRP320*	14.96		1	71	80
		BAYHTRP330*	22.47		2	97	100
		BAYHTRP350*	37.44		2	149	150
15	TWE18043*****BC4, D4	BAYHTRP310*	10.00	230/3/60	1	49	50
		BAYHTRP320*	19.92		1	79	80
		BAYHTRP330*	29.92		2	109	110
		BAYHTRP350*	49.84		2	169	175
15	TWE18044*****BC0, D0	BAYHTRP410*	10.00	460/3/60	1	21	25
		BAYHTRP420*	19.92		1	36	40
		BAYHTRP430*	29.92		2	51	60
		BAYHTRP450*	49.84		2	81	90
15	TWE18044*****BC4, D4	BAYHTRP410*	10.00	460/3/60	1	24	25
		BAYHTRP420*	19.92		1	39	40
		BAYHTRP430*	29.92		2	54	60
		BAYHTRP450*	49.84		2	84	90
15	TWE1804W*****BC0, D0	BAYHTRPW10*	10.00	575/3/60	1	17	20
		BAYHTRPW20*	19.92		1	29	30
		BAYHTRPW30*	29.92		2	41	45
		BAYHTRPW50*	49.84		2	65	70
15	TWE1804W*****BC4, D4	BAYHTRPW10*	10.00	575/3/60	1	19	20
		BAYHTRPW20*	19.92		1	31	35
		BAYHTRPW30*	29.92		2	43	45
		BAYHTRPW50*	49.84		2	67	70
20	TWE24043*****BC0, D0	BAYHTRP310*	7.51	208/3/60	1	45	50
		BAYHTRP320*	14.96		1	71	80
		BAYHTRP330*	22.47		2	97	100
		BAYHTRP350*	37.44		2	149	150
20	TWE24043*****BC0, D0	BAYHTRP310*	10.00	230/3/60	1	49	50
		BAYHTRP320*	19.92		1	79	80
		BAYHTRP330*	29.92		2	109	110
		BAYHTRP350*	49.84		2	169	175
20	TWE24043*****BC4, D4	BAYHTRP310*	7.51	208/3/60	1	55	70
		BAYHTRP320*	14.96		1	80	90
		BAYHTRP330*	22.47		2	107	110
		BAYHTRP350*	37.44		2	159	175
20	TWE24043*****BC4, D4	BAYHTRP310*	10.00	230/3/60	1	59	70
		BAYHTRP320*	19.92		1	88	90
		BAYHTRP330*	29.92		2	119	125
		BAYHTRP350*	49.84		2	179	200
20	TWE24044*****BC0, D0	BAYHTRP410*	10.00	460/3/60	1	24	25
		BAYHTRP420*	19.92		1	39	40
		BAYHTRP430*	29.92		2	54	60
		BAYHTRP450*	49.84		2	84	90
20	TWE24044*****BC4, D4	BAYHTRP410*	10.00	460/3/60	1	28	30

Table 59. Unit wiring with electric heat (single point connection) — 6-20 ton SZVAV and 2-Speed VFD air handlers — 60 Hz (continued)

Tons	Used With	Heater Model Number	Heater KW Rating	Unit Power Supply	Control Stages	MCA	Maximum Fuse or Circuit Breaker Size
		BAYHTRP420*	19.92		1	42	45
		BAYHTRP430*	29.92		2	58	60
		BAYHTRP450*	49.84		2	87	90
20	TWE2404W*****BC0, D0	BAYHTRPW10*	10.00	575/3/60	1	19	20
		BAYHTRPW20*	19.92		1	31	35
		BAYHTRPW30*	29.92		2	43	45
		BAYHTRPW50*	49.84		2	67	70
20	TWE2404W*****BC4, D4	BAYHTRPW10*	10.00	575/3/60	1	22	25
		BAYHTRPW20*	19.92		1	34	35
		BAYHTRPW30*	29.92		2	46	50
		BAYHTRPW50*	49.84		2	70	80

AIRE Y CLIMA ESPECIALIZADO

Jobsite Connections

Symbio™ Controls

Wiring shown with dashed lines is to be furnished and installed by the customer. All customer supplied wiring must be copper only and must conform to NEC and local electrical codes. Codes may require line of sight between disconnect switch and unit.

Figure 15. Symbio™ jobsite connections

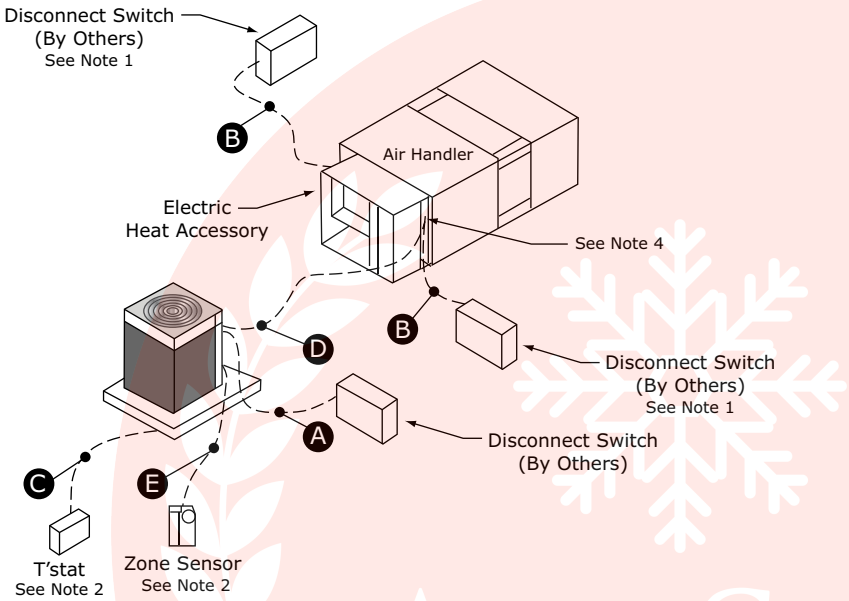

Power Wires

A. 3 wires, line voltage for 3 phase, 1 grounding wire**

B. 3 wires, line voltage for 3 phase, (2 wires for single phase) 1 grounding wire**

Control Wires

C. Heat Pump thermostat: 6 to 9 wires depending on T'stat options and stages of cooling and heating

D. Wiring between indoor and outdoor unit: 5 to 11 wires depending on unit control options*

E. Zone Sensor: 4 to 7 wires depending on zone sensor model*

Communication signal wires require shielded twisted pairs.

Use factory-supplied 165 ft. length of Comlink cable with a PVC jacket, 18/1 PR, stranded shield, 25 PF/FT plenum rated for the field communication signal wiring.

AIRE Y CLIMA ESPECIALIZADO

Notes:

1. *When electric heater accessory is used, single point power entry or dual point power entry is field optional. Single point power entry option is through electric heater only.*
2. **Choose only one of the following; Thermostat, Mechanical Zone Sensor, Programmable Zone Sensor Panel or BAS Zone Sensor.*
3. **

⚠ WARNING

Electrical Shock Hazard!

Failure to follow instructions below could result in death or serious injury.
Properly connect the system's oversized protective earthing (grounding) terminal.

4. *Once power wire connections are complete inside the air handler control box, seal the sheet metal entry points of the control box by using parts (neoprene gasket, grommet, and plug) shipped along with the air handler unit package.*

Important: *For the EDC switch to be functional and thereby facilitate reliable unit operation, make the EDC connections from the indoor to the outdoor control boxes.*

Table 60. Recommended thermostat wire size

Wire Size	Maximum Wire Length
(Gauge)	Physical distance between Unit & T'stat
22	30 Feet
20	50 Feet
18	75 Feet
16	125 Feet
14	200 Feet

Table 61. Zone sensor module wiring

Distance from Unit to Control	Recommended Wire Size
0-150 feet (0-45.7 m)	22 gauge (0.33 mm^2)
151-240 feet (46-73.1 m)	20 gauge (0.50 mm^2)
241-305 feet (73.5-117.3 m)	18 gauge (0.75 mm^2)
386-610 feet (117.7-185.9 m)	16 gauge (1.31 mm^2)
611-970 feet (186.2-295.7 m)	14 gauge (2.08 mm^2)

AIRE Y CLIMA ESPECIALIZADO

Dimensional Data

Heat Pump

Figure 16. 6-7.5 ton heat pump, single compressor – in (mm)

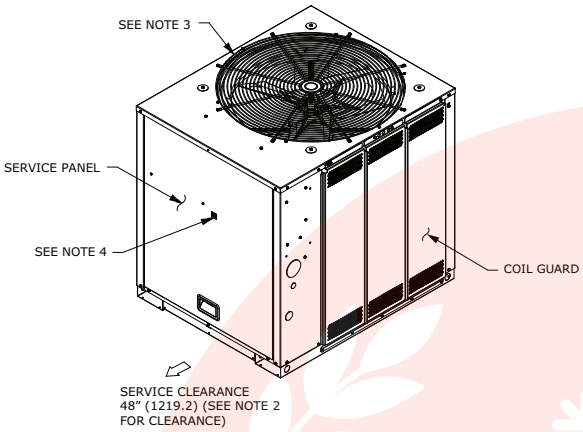

NOTES:
1. ACCESS OPENING IS FOR FIELD INSTALLED BAYLOAM ACCESSORY.
2. MINIMUM CLEARANCE FOR PROPER OPERATION IS 36" (914.4) FROM WALLS, SHRUBBERY, PRIVACY FENCES ETC. MINIMUM CLEARANCE BETWEEN ADJACENT UNITS IS 72" (1828.8). RECOMMENDED SERVICE CLEARANCE 48" (1219.2)
3. TOP DISCHARGE AREA SHOULD BE UNRESTRICTED FOR 100" (2540) MINIMUM. UNIT SHOULD BE PLACED SO ROOF RUN-OFF WATER OR FALLING SNOW FROM ROOF DOES NOT POUR/FALL DIRECTLY ON UNIT
4. OUTDOOR AIR TEMPERATURE SENSOR OPENING (DO NOT BLOCK OPENING)

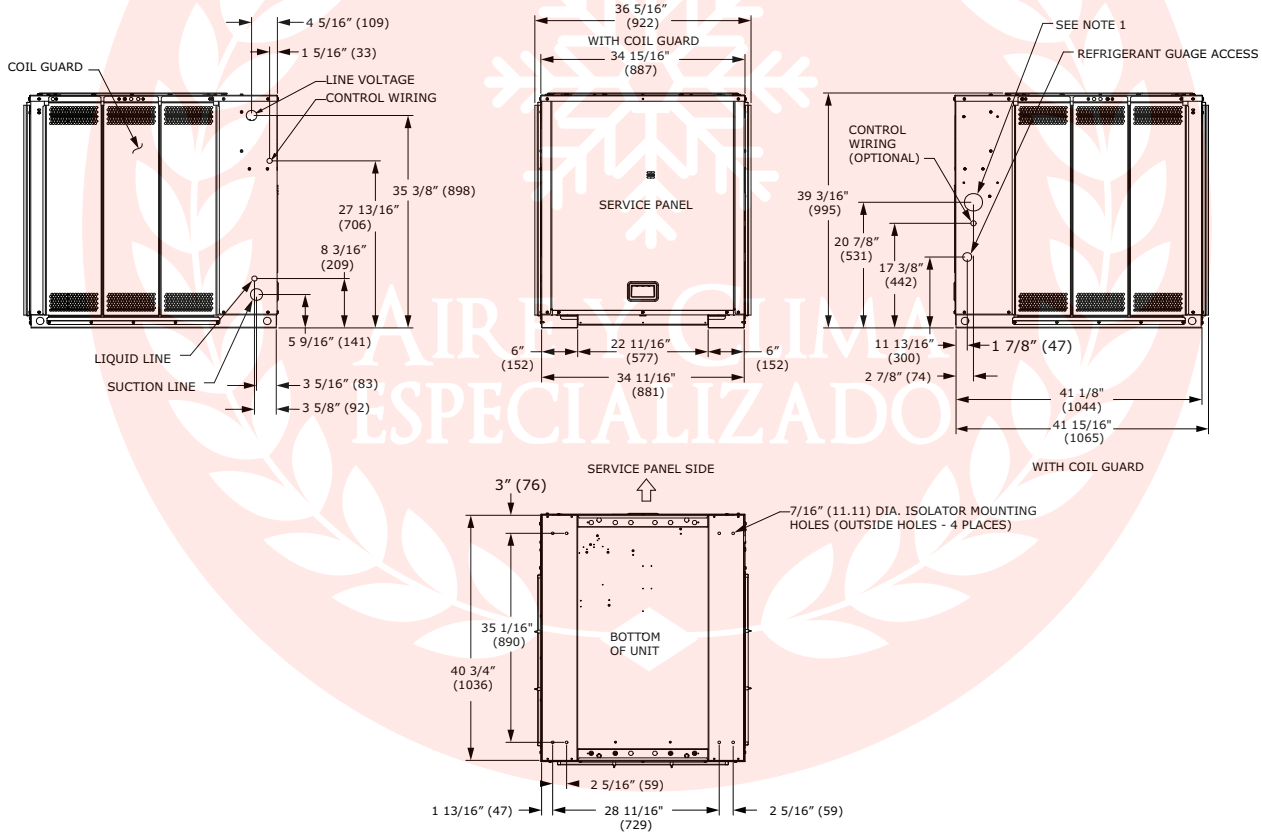

Figure 17. 6-7.5 ton heat pump, dual compressor – in (mm)

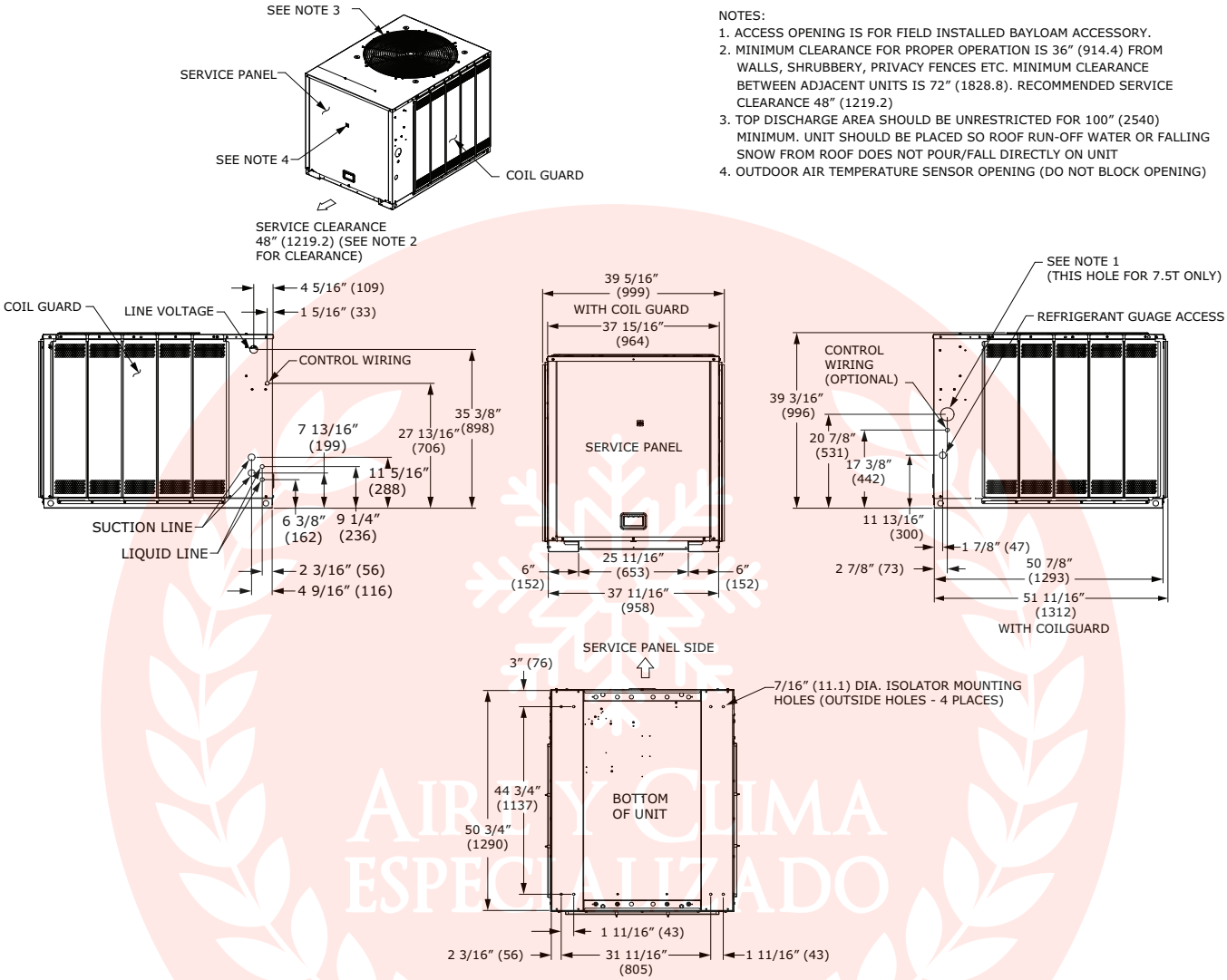

NOTES:
1. ACCESS OPENING IS FOR FIELD INSTALLED BAYLOAM ACCESSORY.
2. MINIMUM CLEARANCE FOR PROPER OPERATION IS 36″ (914.4) FROM WALLS, SHRUBBERY, PRIVACY FENCES ETC. MINIMUM CLEARANCE BETWEEN ADJACENT UNITS IS 72″ (1828.8). RECOMMENDED SERVICE CLEARANCE 48″ (1219.2)
3. TOP DISCHARGE AREA SHOULD BE UNRESTRICTED FOR 100″ (2540) MINIMUM. UNIT SHOULD BE PLACED SO ROOF RUN-OFF WATER OR FALLING SNOW FROM ROOF DOES NOT POUR/FALL DIRECTLY ON UNIT
4. OUTDOOR AIR TEMPERATURE SENSOR OPENING (DO NOT BLOCK OPENING)

AIRE Y CLIMA ESPECIALIZADO

Figure 18. 10 ton heat pump, single compressor – in (mm)

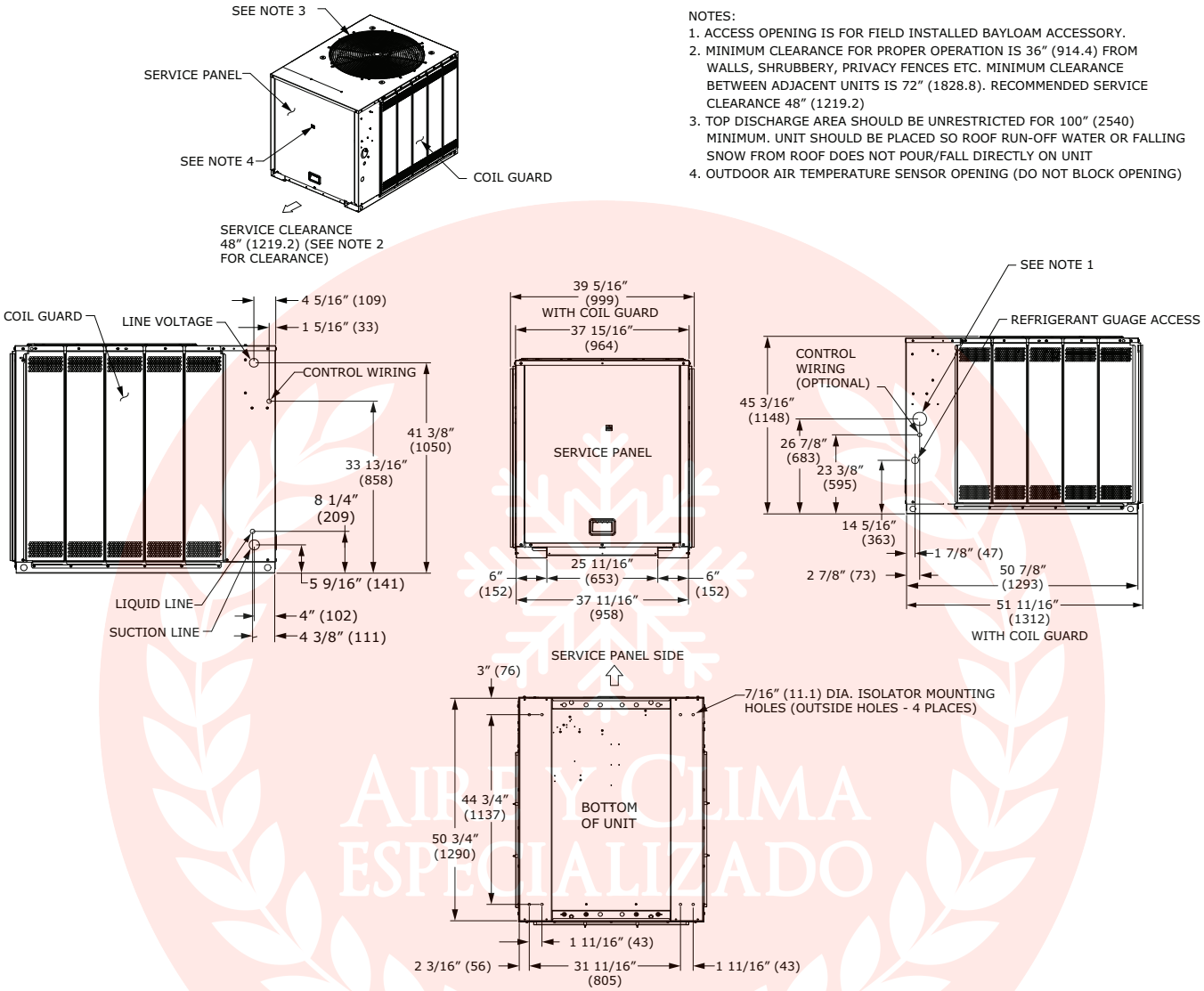

NOTES:
1. ACCESS OPENING IS FOR FIELD INSTALLED BAYLOAM ACCESSORY.
2. MINIMUM CLEARANCE FOR PROPER OPERATION IS 36″ (914.4) FROM WALLS, SHRUBBERY, PRIVACY FENCES ETC. MINIMUM CLEARANCE BETWEEN ADJACENT UNITS IS 72″ (1828.8). RECOMMENDED SERVICE CLEARANCE 48″ (1219.2)
3. TOP DISCHARGE AREA SHOULD BE UNRESTRICTED FOR 100″ (2540) MINIMUM. UNIT SHOULD BE PLACED SO ROOF RUN-OFF WATER OR FALLING SNOW FROM ROOF DOES NOT POUR/FALL DIRECTLY ON UNIT
4. OUTDOOR AIR TEMPERATURE SENSOR OPENING (DO NOT BLOCK OPENING)

AIRE Y CLIMA
ESPECIALIZADO

Figure 19. 10 ton heat pump, dual compressor – in (mm)

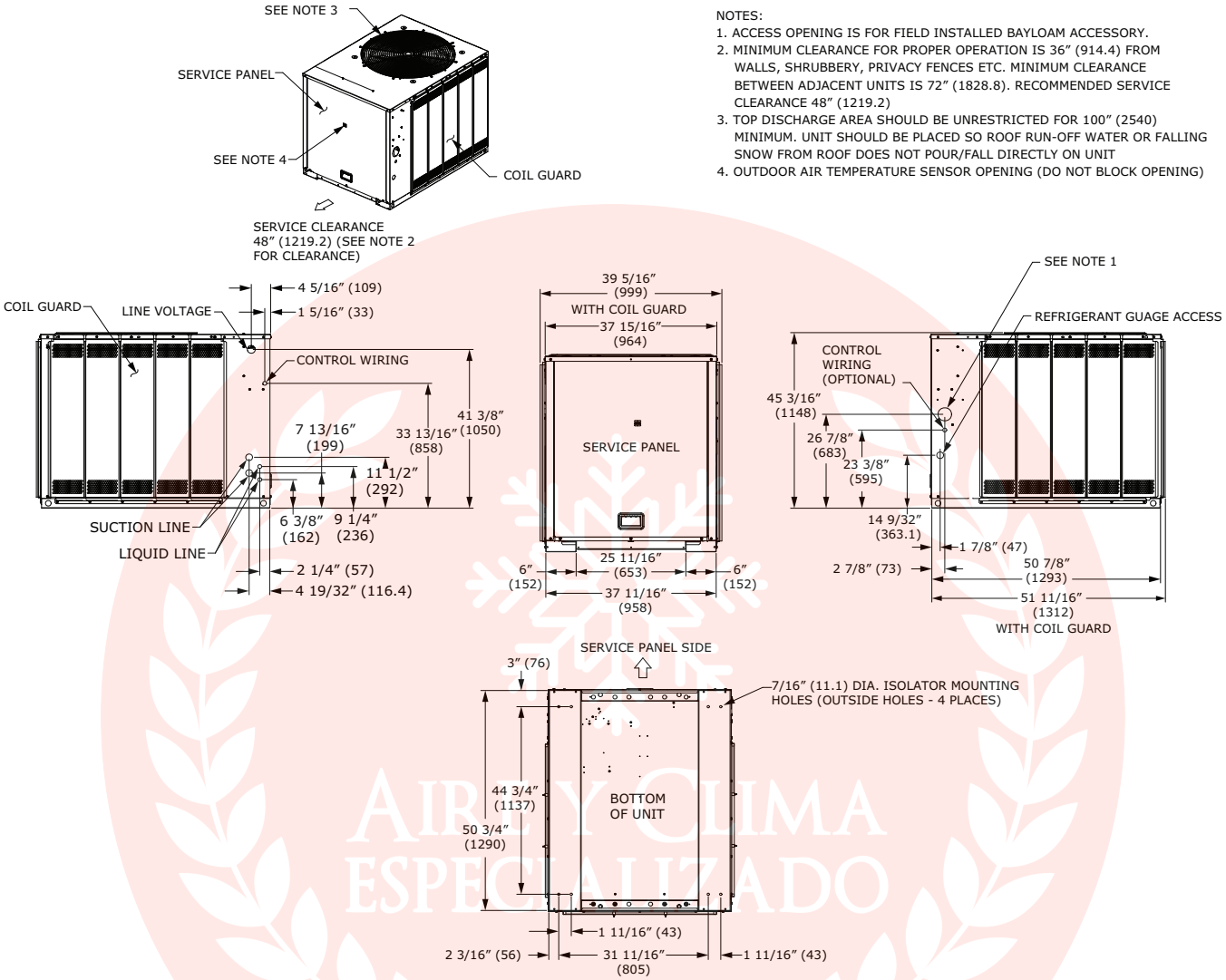

Figure 20. 15, 20 ton heat pump, dual compressor – in (mm)

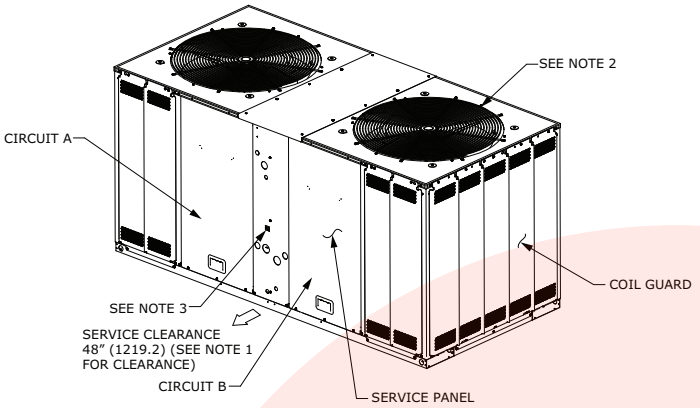

NOTES:

1. MINIMUM CLEARANCE FOR PROPER OPERATION IS 36″ (914.4) FROM WALLS, SHRUBBERY, PRIVACY FENCES ETC. MINIMUM CLEARANCE BETWEEN ADJACENT UNITS IS 72″ (1828.8). RECOMMENDED SERVICE CLEARANCE 48″ (1219.2)
2. TOP DISCHARGE AREA SHOULD BE UNRESTRICTED FOR 100″ (2540) MINIMUM. UNIT SHOULD BE PLACED SO ROOF RUN-OFF WATER OR FALLING SNOW FROM ROOF DOES NOT POUR/FALL DIRECTLY ON UNIT
3. OUTDOOR AIR TEMPERATURE SENSOR OPENING (DO NOT BLOCK OPENING)

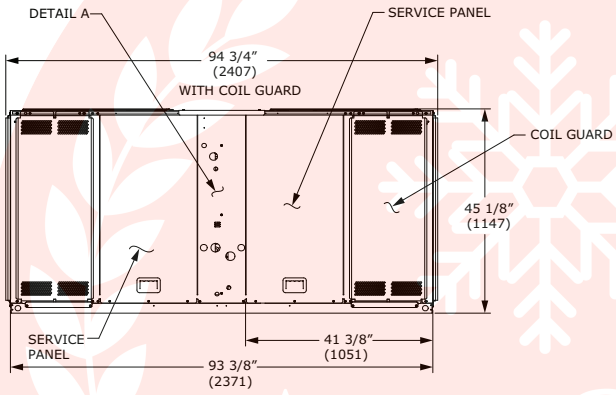

OPTIONAL REAR ACCESS
DIMENSIONAL DETAIL

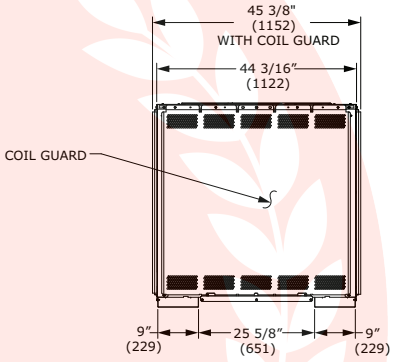

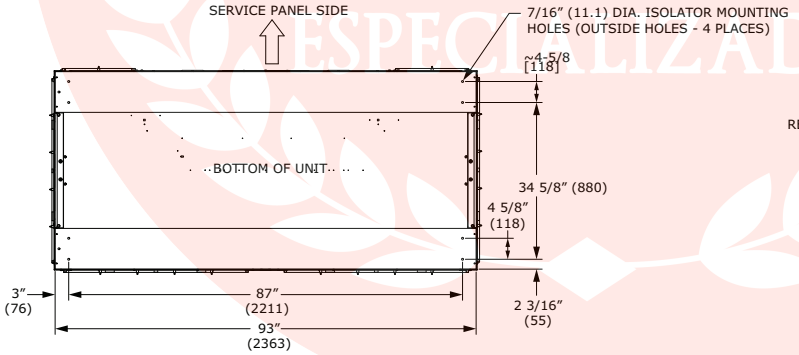

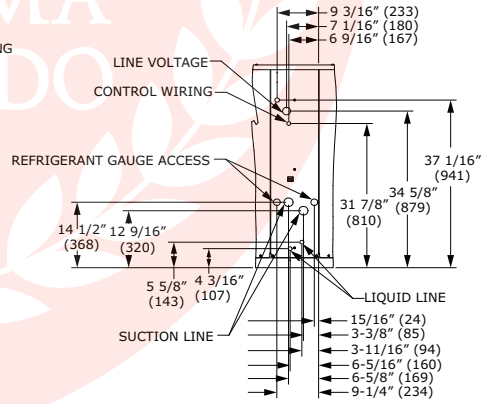

FRONT DETAIL A
DIMENSIONAL DEATIL

AIRE Y CLIMA
ESPECIALIZADO

Air Handler

Figure 21. 5 ton air handler, single circuit – in. (mm)

Note: *Duct flange is a field-installed accessory.*

NOTES:
1. PANEL DEPTH 1/2″ (12.7) (TYP. ALL PANELS).
2. REMOVABLE DRAIN PAN AND ATTACHED DRAIN CONNECTION MAY BE INSTALLED ON END OF UNIT IN EITHER THE VERTICAL OR HORIZONTAL CONFIGURATION, PLASTIC DRAIN PAN ACCESS PLATE ON THE END OF UNIT OPPOSITE DRAIN CONNECTION MUST BE REMOVED TO SLIDE DRAIN PAN OUT OF UNIT FOR CLEANING. ACCESS PLATE MUST BE RE-INSTALLED AFTER SLIDING DRAIN PAN BACK INTO UNIT.
3. IF PERIODIC DRAIN PAN CLEANING IS REQUIRED, ALLOW ROOM FOR PARTIAL REMOVAL OF DRAIN PAN CONNECTION AT END OF UNIT.
4. 1″ (25.4) FEMALE SCHED. 40 (10.2) PVC PIPE DRAIN CONNECTION VERTICAL CONFIGURATION.
5. 1″ (25.4) FEMALE SCHED. 40 (10.2) PVC PIPE DRAIN CONNECTION HORIZONTAL CONFIGURATION.

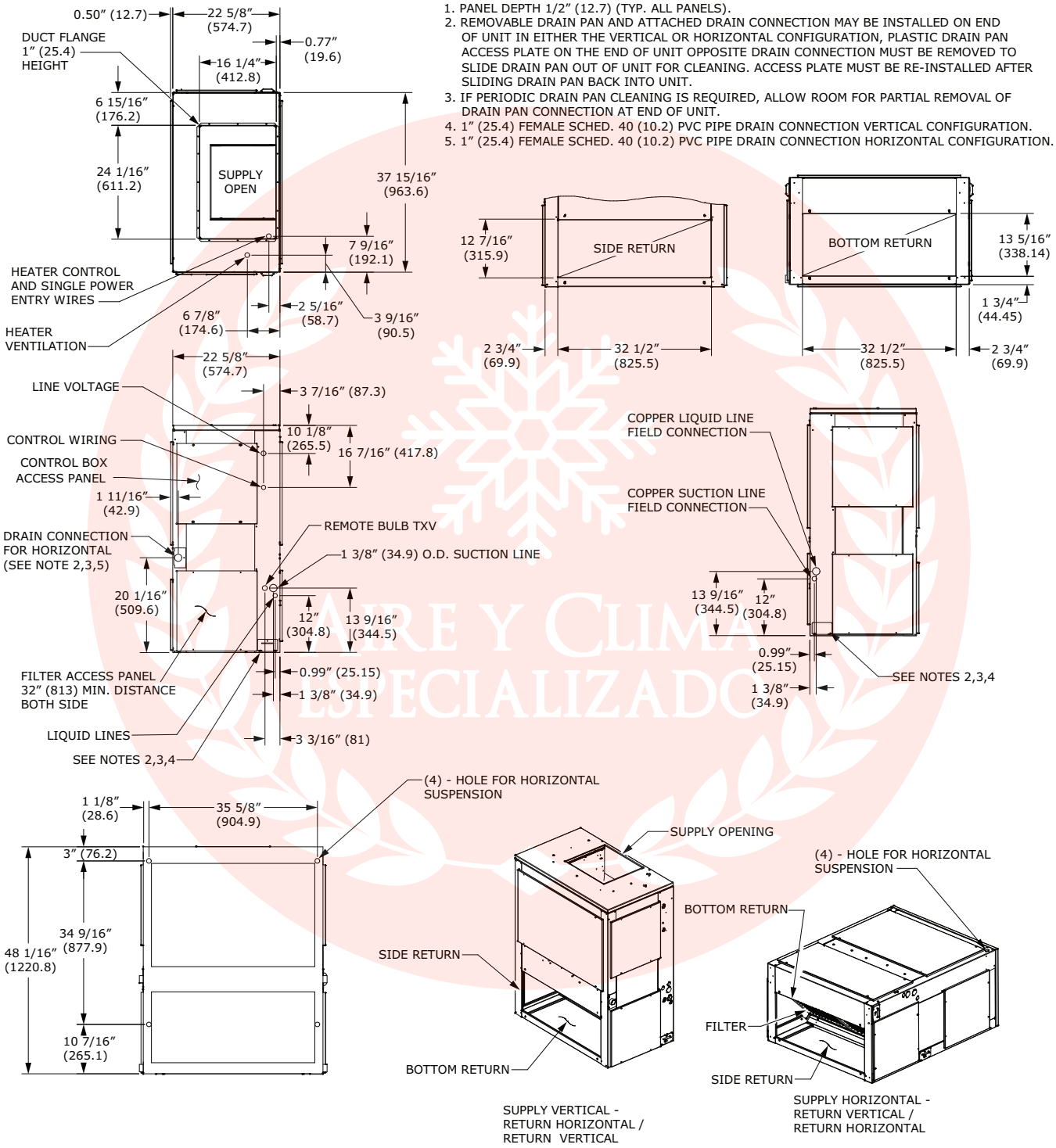

Figure 22. 5 ton air handler, dual circuit – in. (mm)

Note: *Duct flange is a field-installed accessory.*

NOTES:
1. PANEL DEPTH 1/2" (12.7) (TYP. ALL PANELS).
2. REMOVABLE DRAIN PAN AND ATTACHED DRAIN CONNECTION MAY BE INSTALLED ON END OF UNIT IN EITHER THE VERTICAL OR HORIZONTAL CONFIGURATION, PLASTIC DRAIN PAN ACCESS PLATE ON THE END OF UNIT OPPOSITE DRAIN CONNECTION MUST BE REMOVED TO SLIDE DRAIN PAN OUT OF UNIT FOR CLEANING. ACCESS PLATE MUST BE RE-INSTALLED AFTER SLIDING DRAIN PAN BACK INTO UNIT.
3. IF PERIODIC DRAIN PAN CLEANING IS REQUIRED, ALLOW ROOM FOR PARTIAL REMOVAL OF DRAIN CONNECTION AT END OF UNIT.
4. 1" (25.4) FEMALE SCHED. 40 (10.2) PVC PIPE DRAIN CONNECTION VERTICAL CONFIGURATION.
5. 1" (25.4) FEMALE SCHED. 40 (10.2) PVC PIPE DRAIN CONNECTION HORIZONTAL CONFIGURATION.

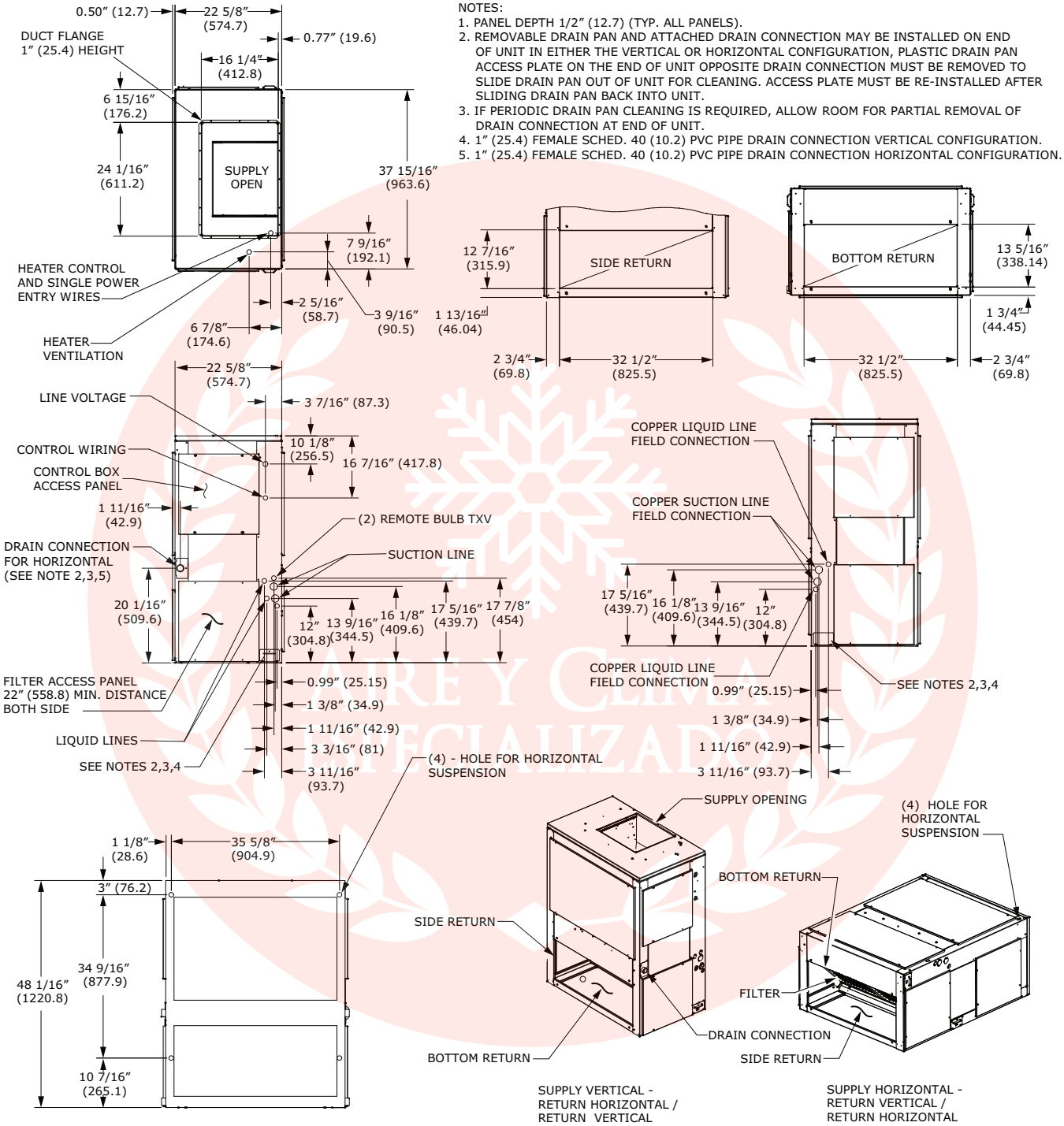

Figure 23. 7.5 ton air handler, single circuit – in. (mm)

Note: *Duct flange is a field-installed accessory.*

NOTES:
1. PANEL DEPTH 1/2″ (12.7) (TYP. ALL PANELS).
2. REMOVABLE DRAIN PAN AND ATTACHED DRAIN CONNECTION MAY BE INSTALLED ON END OF UNIT IN EITHER THE VERTICAL OR HORIZONTAL CONFIGURATION, PLASTIC DRAIN PAN ACCESS PLATE ON THE END OF UNIT OPPOSITE DRAIN CONNECTION MUST BE REMOVED TO SLIDE DRAIN PAN OUT OF UNIT FOR CLEANING. ACCESS PLATE MUST BE RE-INSTALLED AFTER SLIDING DRAIN PAN BACK INTO UNIT.
3. IF PERIODIC DRAIN PAN CLEANING IS REQUIRED, ALLOW ROOM FOR PARTIAL REMOVAL OF DRAIN PAN CONNECTION AT END OF UNIT.
4. 1″ (25.4) FEMALE SCHED. 40 (10.2) PVC PIPE DRAIN CONNECTION VERTICAL CONFIGURATION.
5. 1″ (25.4) FEMALE SCHED. 40 (10.2) PVC PIPE DRAIN CONNECTION HORIZONTAL CONFIGURATION.

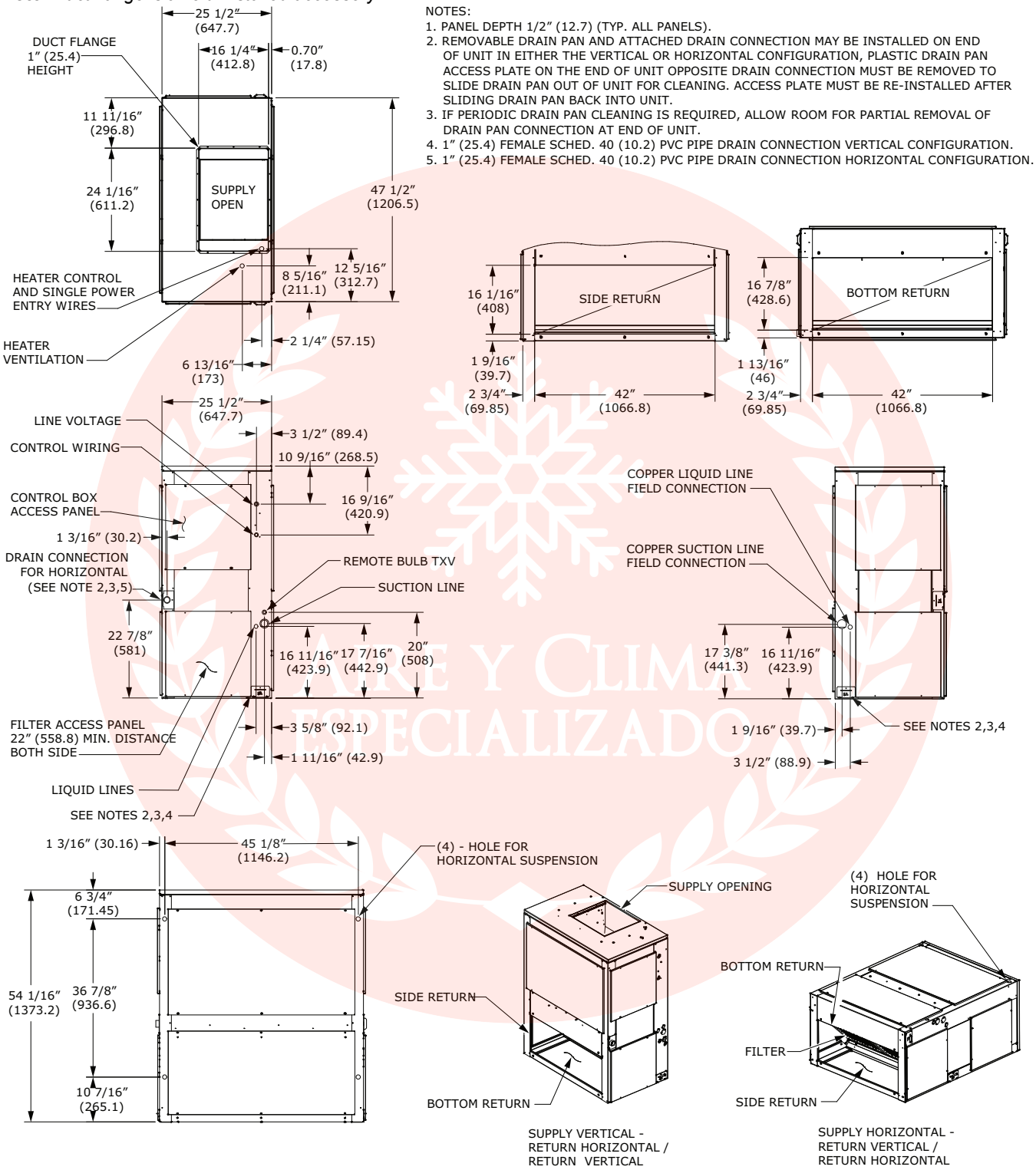

AIRE Y CLIMA ESPECIALIZADO

Figure 24. 6, 7.5 ton air handler, dual circuit – in. (mm)

Note: *Duct flange is a field-installed accessory.*

NOTES:
1. PANEL DEPTH 1/2" (12.7) (TYP. ALL PANELS).
2. REMOVABLE DRAIN PAN AND ATTACHED DRAIN CONNECTION MAY BE INSTALLED ON END OF UNIT IN EITHER THE VERTICAL OR HORIZONTAL CONFIGURATION, PLASTIC DRAIN PAN ACCESS PLATE ON THE END OF UNIT OPPOSITE DRAIN CONNECTION MUST BE REMOVED TO SLIDE DRAIN PAN OUT OF UNIT FOR CLEANING. ACCESS PLATE MUST BE RE-INSTALLED AFTER SLIDING DRAIN PAN BACK INTO UNIT.
3. IF PERIODIC DRAIN PAN CLEANING IS REQUIRED, ALLOW ROOM FOR PARTIAL REMOVAL OF DRAIN PAN CONNECTION AT END OF UNIT.
4. 1" (25.4) FEMALE SCHED. 40 (10.2) PVC PIPE DRAIN CONNECTION VERTICAL CONFIGURATION.
5. 1" (25.4) FEMALE SCHED. 40 (10.2) PVC PIPE DRAIN CONNECTION HORIZONTAL CONFIGURATION.

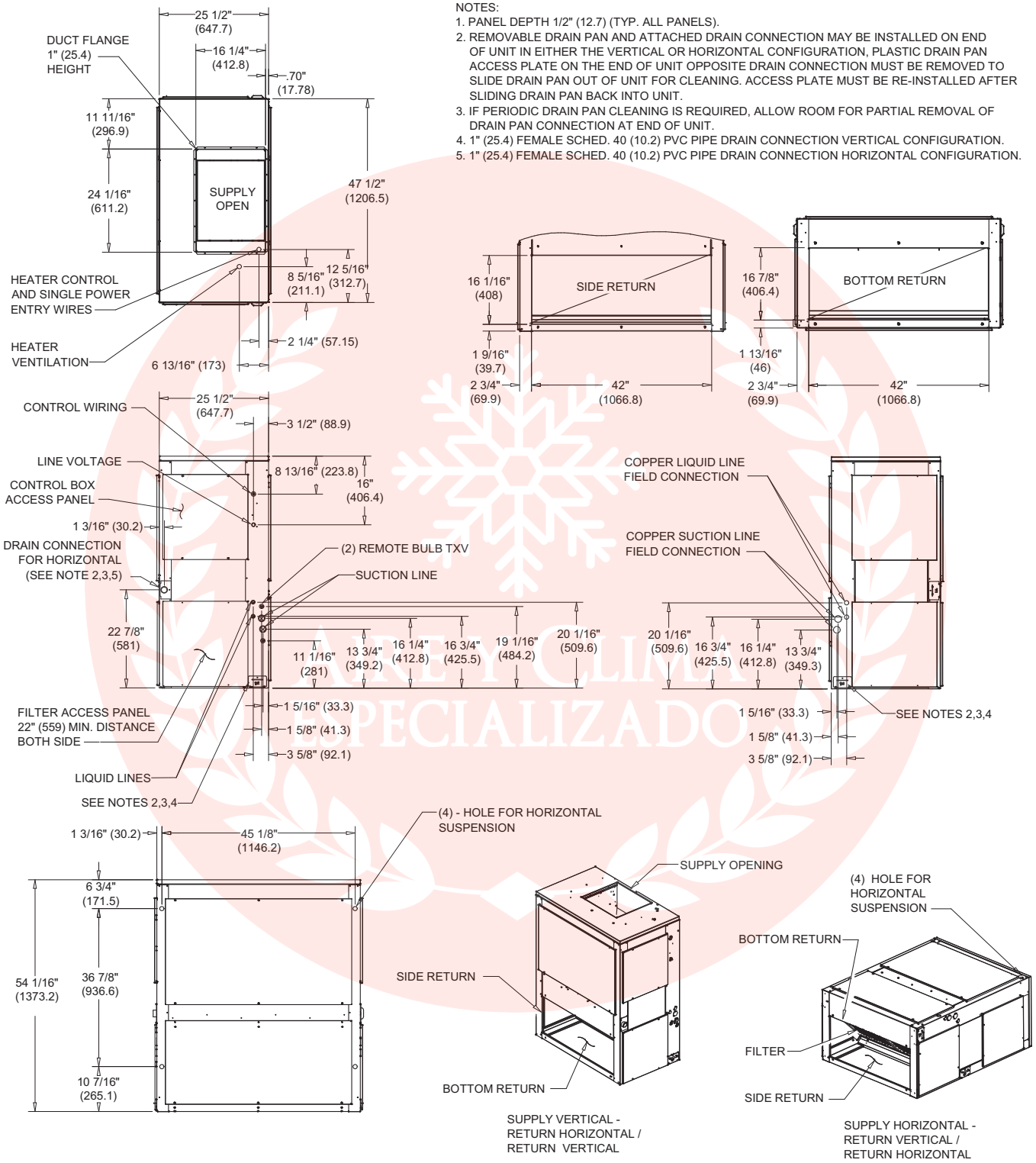

Figure 25. 10 ton air handler, single circuit – in. (mm)

Note: *Duct flange is a field-installed accessory.*

NOTES:
1. PANEL DEPTH 1/2″ (12.7) (TYP. ALL PANELS).
2. REMOVABLE DRAIN PAN AND ATTACHED DRAIN CONNECTION MAY BE INSTALLED ON END OF UNIT IN EITHER THE VERTICAL OR HORIZONTAL CONFIGURATION, PLASTIC DRAIN PAN ACCESS PLATE ON THE END OF UNIT OPPOSITE DRAIN CONNECTION MUST BE REMOVED TO SLIDE DRAIN PAN OUT OF UNIT FOR CLEANING. ACCESS PLATE MUST BE RE-INSTALLED AFTER SLIDING DRAIN PAN BACK INTO UNIT.
3. IF PERIODIC DRAIN PAN CLEANING IS REQUIRED, ALLOW ROOM FOR PARTIAL REMOVAL OF DRAIN PAN CONNECTION AT END OF UNIT.
4. 1″ (25.4) FEMALE SCHED. 40 (10.2) PVC PIPE DRAIN CONNECTION VERTICAL CONFIGURATION.
5. 1″ (25.4) FEMALE SCHED. 40 (10.2) PVC PIPE DRAIN CONNECTION HORIZONTAL CONFIGURATION.

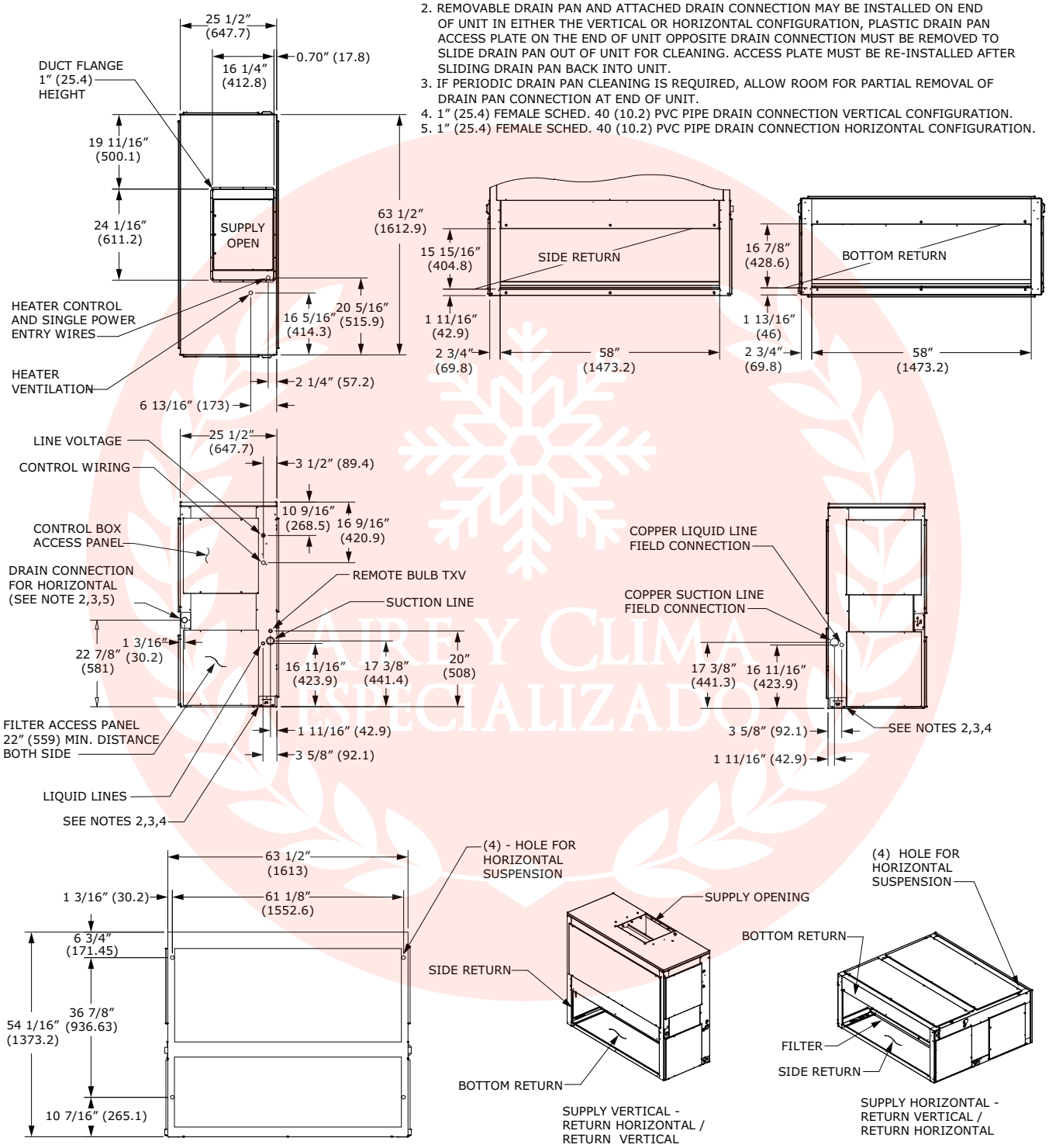

AREY CLIMA ESPECIALIZADO

Figure 26. 10 ton air handler, dual circuit – in. (mm)

Note: *Duct flange is a field-installed accessory.*

NOTES:
1. PANEL DEPTH 1/2″ (12.7) (TYP. ALL PANELS).
2. REMOVABLE DRAIN PAN AND ATTACHED DRAIN CONNECTION MAY BE INSTALLED ON END OF UNIT IN EITHER THE VERTICAL OR HORIZONTAL CONFIGURATION, PLASTIC DRAIN PAN ACCESS PLATE ON THE END OF UNIT OPPOSITE DRAIN CONNECTION MUST BE REMOVED TO SLIDE DRAIN PAN OUT OF UNIT FOR CLEANING. ACCESS PLATE MUST BE RE-INSTALLED AFTER SLIDING DRAIN PAN BACK INTO UNIT.
3. IF PERIODIC DRAIN PAN CLEANING IS REQUIRED, ALLOW ROOM FOR PARTIAL REMOVAL OF DRAIN PAN CONNECTION AT END OF UNIT.
4. 1″ (25.4) FEMALE SCHED. 40 (10.2) PVC PIPE DRAIN CONNECTION VERTICAL CONFIGURATION.
5. 1″ (25.4) FEMALE SCHED. 40 (10.2) PVC PIPE DRAIN CONNECTION HORIZONTAL CONFIGURATION.

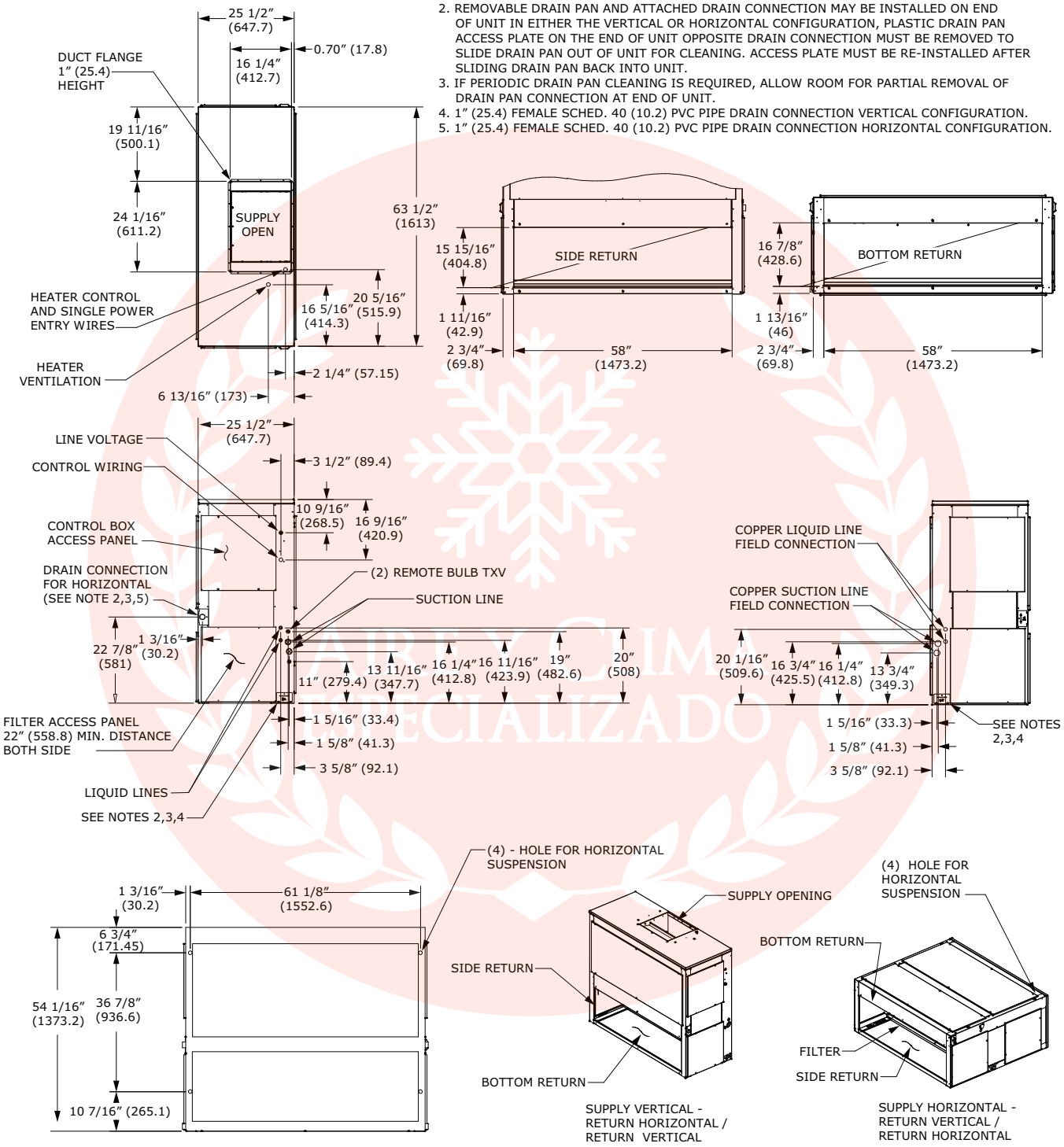

Figure 27. 15 ton air handler, dual circuit – in. (mm)

Note: *Duct flange is a field-installed accessory.*

NOTES:
1. PANEL DEPTH 1/2″ (12.7) (TYP. ALL PANELS).
2. REMOVABLE DRAIN PAN AND ATTACHED DRAIN CONNECTION MAY BE INSTALLED ON END OF UNIT IN EITHER THE VERTICAL OR HORIZONTAL CONFIGURATION, PLASTIC DRAIN PAN ACCESS PLATE ON THE END OF UNIT OPPOSITE DRAIN CONNECTION MUST BE REMOVED TO SLIDE DRAIN PAN OUT OF UNIT FOR CLEANING. ACCESS PLATE MUST BE RE-INSTALLED AFTER SLIDING DRAIN PAN BACK INTO UNIT.
3. IF PERIODIC DRAIN PAN CLEANING IS REQUIRED, ALLOW ROOM FOR PARTIAL REMOVAL OF DRAIN PAN CONNECTION AT END OF UNIT.
4. 1″ (25.4) FEMALE SCHED. 40 (10.2) PVC PIPE DRAIN CONNECTION VERTICAL CONFIGURATION.
5. 1″ (25.4) FEMALE SCHED. 40 (10.2) PVC PIPE DRAIN CONNECTION HORIZONTAL CONFIGURATION.

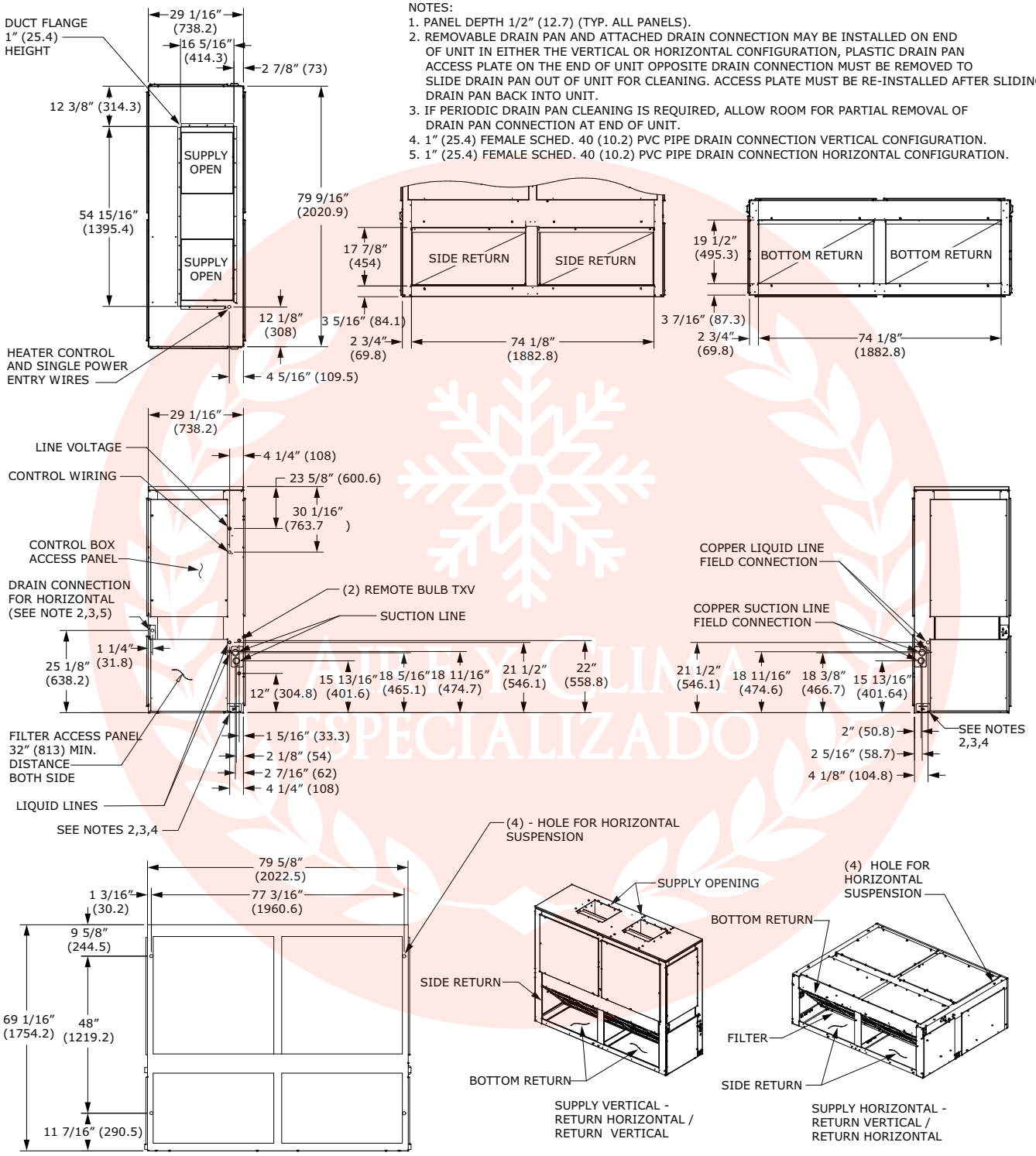

Figure 28. 20 ton air handler, dual circuit – in. (mm)

Note: *Duct flange is a field-installed accessory.*

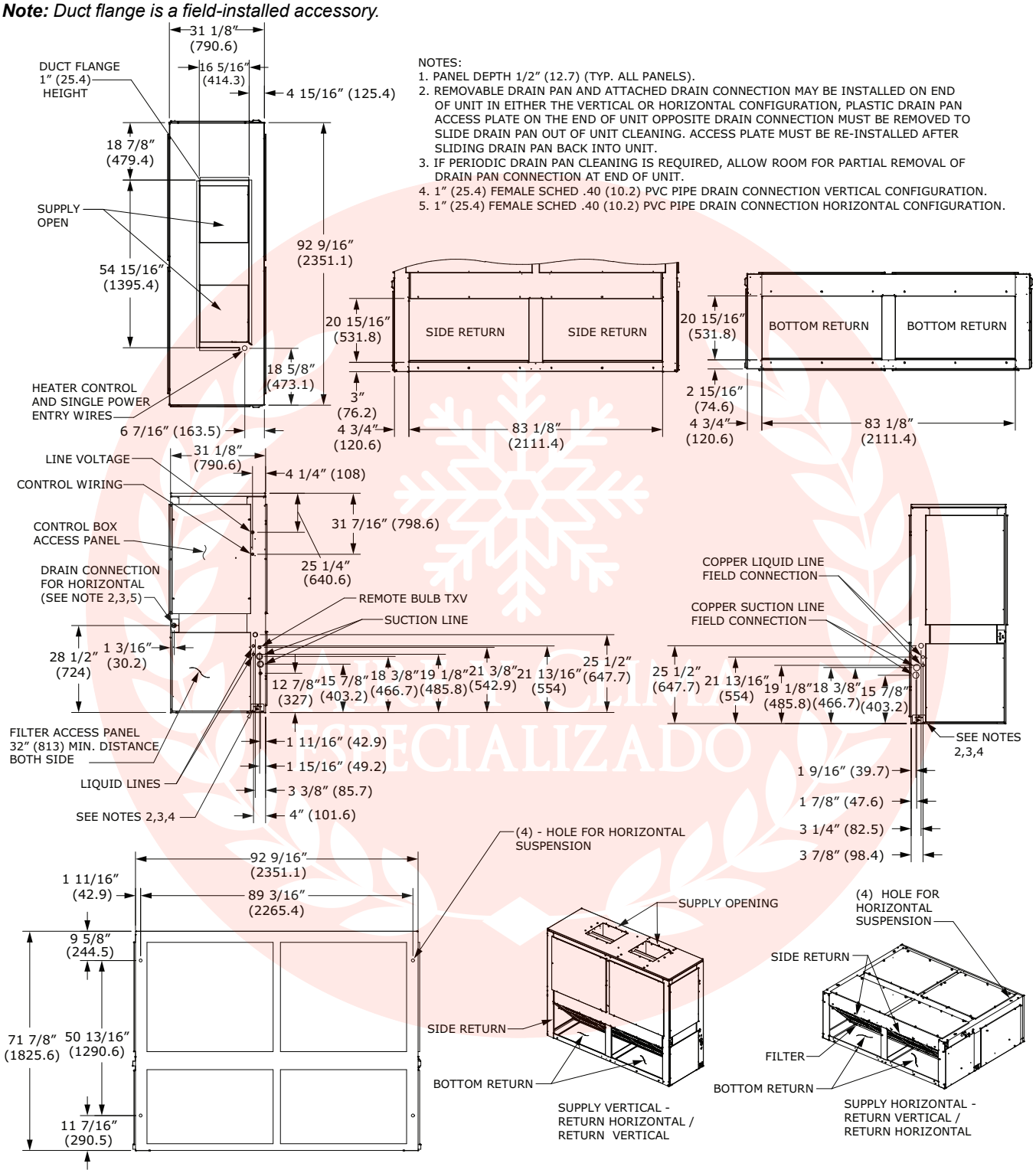

Accessories

Figure 29. Rubber isolator accessory dimensions

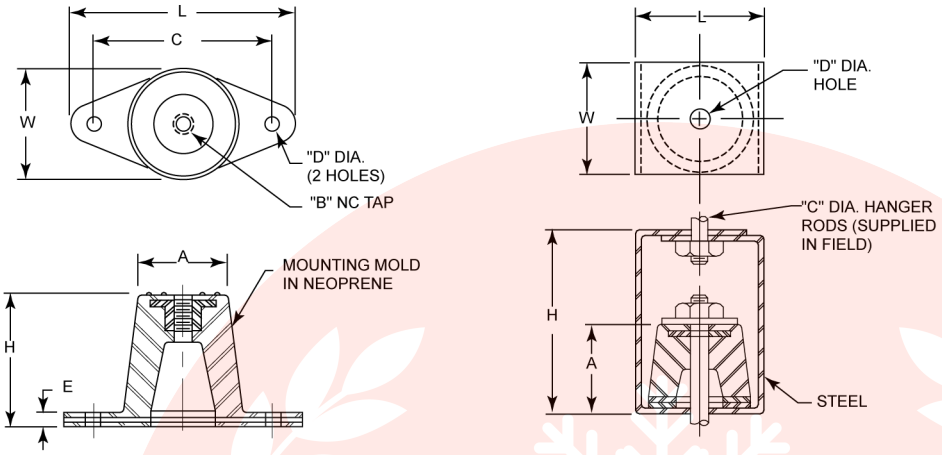

BAYISLT004, 005, 009, 010

BAYISLT012, 013, 014, 015, 016

Table 62. Rubber isolator accessory dimensions – in (mm)

Model No.	L	W	H	A	B	C	D	E
BAYISLT004	3-1/8 (79.375)	1-3/4 (44.45)	1-1/4 (31.75)	1-1/4 (31.75)	3/8 (9.525)	2-3/8 (60.325)	3/8 (9.525)	1/4 (6.35)
BAYISLT005	3-7/8 (98.425)	2-3/8 (60.325)	1-3/4 (44.45)	1-3/4 (44.45)	3/8 (9.525)	3 (76.2)	3/8 (9.525)	1/4 (6.35)
BAYISLT009	3-7/8 (98.425)	2-3/8 (60.325)	1-3/4 (44.45)	1-3/4 (44.45)	3/8 (9.525)	3 (76.2)	3/8 (9.525)	1/4 (6.35)
BAYISLT010	3-7/8 (98.425)	2-3/8 (60.325)	1-3/4 (44.45)	1-3/4 (44.45)	3/8 (9.525)	3 (76.2)	3/8 (9.525)	1/4 (6.35)
BAYISLT013	2-1/4 (57.15)	2 (50.8)	3 (76.2)	1-3/8 (34.925)	3/4 (19.05)	3/8 (9.525)	1/2 (12.7)	—
BAYISLT014	2-1/4 (57.15)	2 (50.8)	3 (76.2)	1-3/8 (34.925)	3/4 (19.05)	3/8 (9.525)	1/2 (12.7)	—
BAYISLT015	2-1/4 (57.15)	2 (50.8)	3 (76.2)	1-3/8 (34.925)	3/4 (19.05)	3/8 (9.525)	1/2 (12.7)	—
BAYISLT012	3 (76.2)	2-1/4 (57.15)	4-1/2 (114.3)	1-7/8 (47.625)	1/4 (6.35)	5/8 (15.875)	3/4 (19.05)	—
BAYISLT015[a]	3 (76.2)	2-1/4 (57.15)	4-1/2 (114.3)	1-7/8 (47.625)	1/4 (6.35)	5/8 (15.875)	3/4 (19.05)	—
BAYISLT016	3 (76.2)	2-1/4 (57.15)	4-1/2 (114.3)	1-7/8 (47.625)	1/4 (6.35)	5/8 (15.875)	3/4 (19.05)	—

Note: BAYISLT015 contains a quantity 2 of the 2-1/4 x 2 x 3 isolators and quantity of 3 of the 3 x 2-1/4 x 4-1/2 isolators.

Figure 30. Spring isolator accessory dimensions – in (mm)

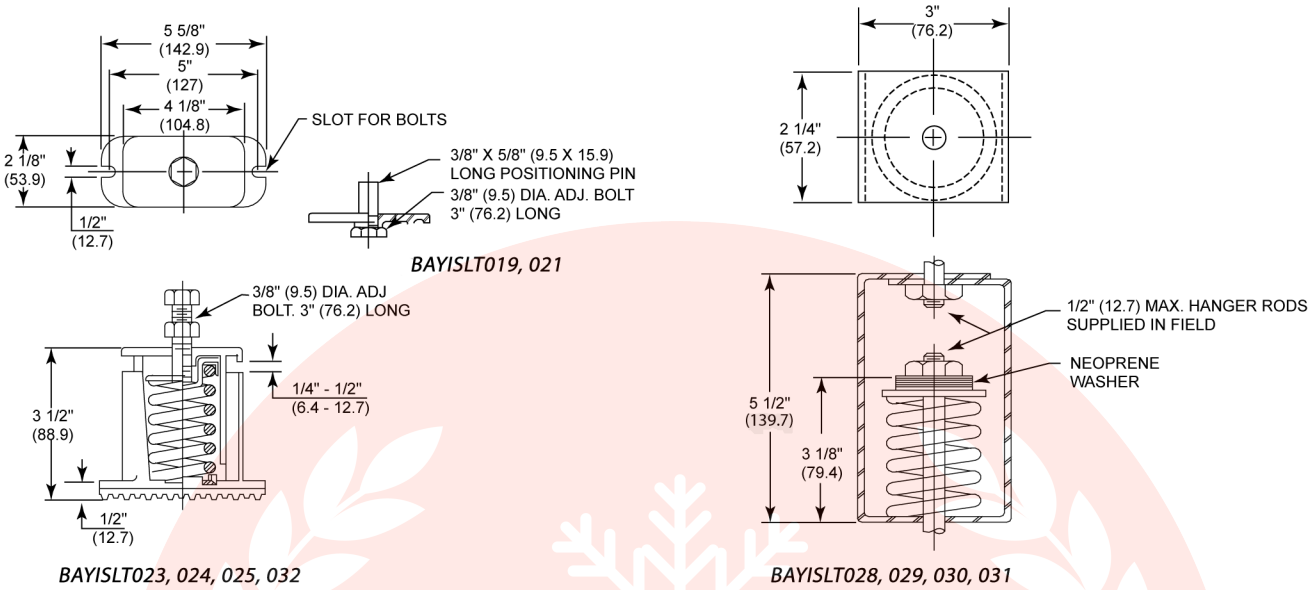

Figure 31. Electric heater accessory for 5-10 ton air handlers – in (mm)

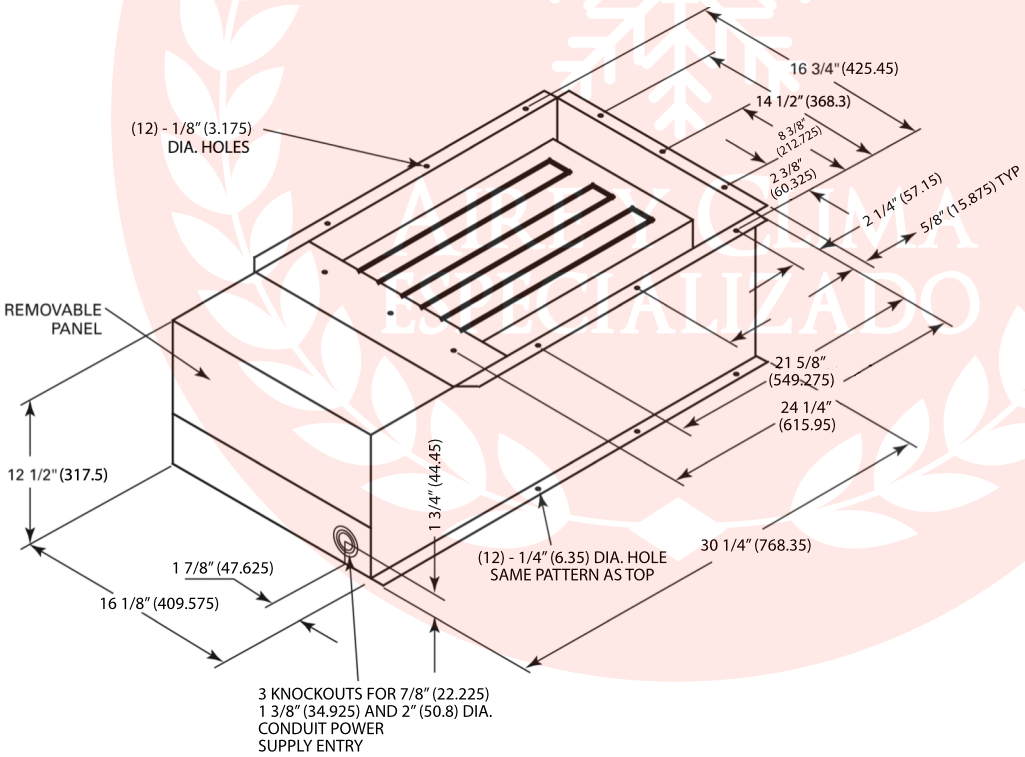

Figure 32. Electric heater accessory for 12.5-20 ton air handlers – in (mm)

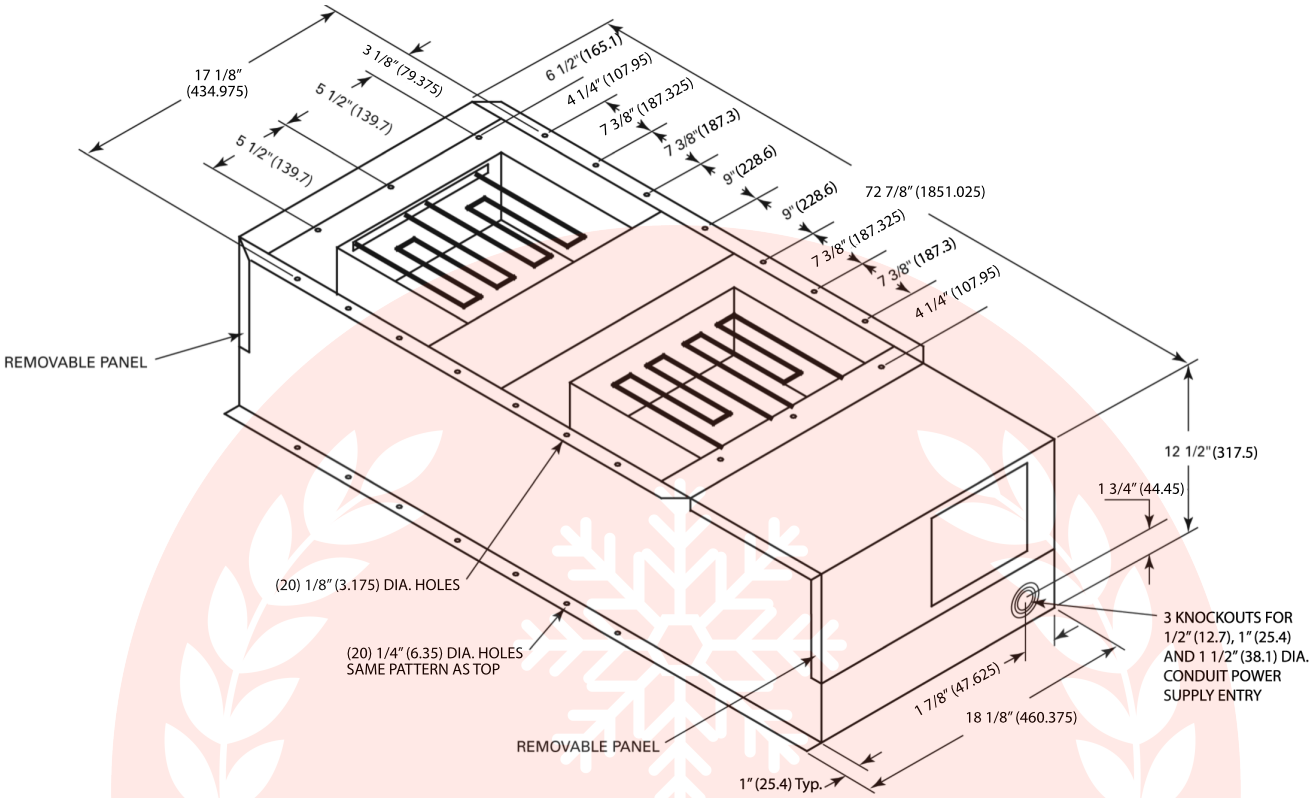

AIRE Y CLIMA
ESPECIALIZADO

Figure 33. Hot water coil accessory – in (mm)

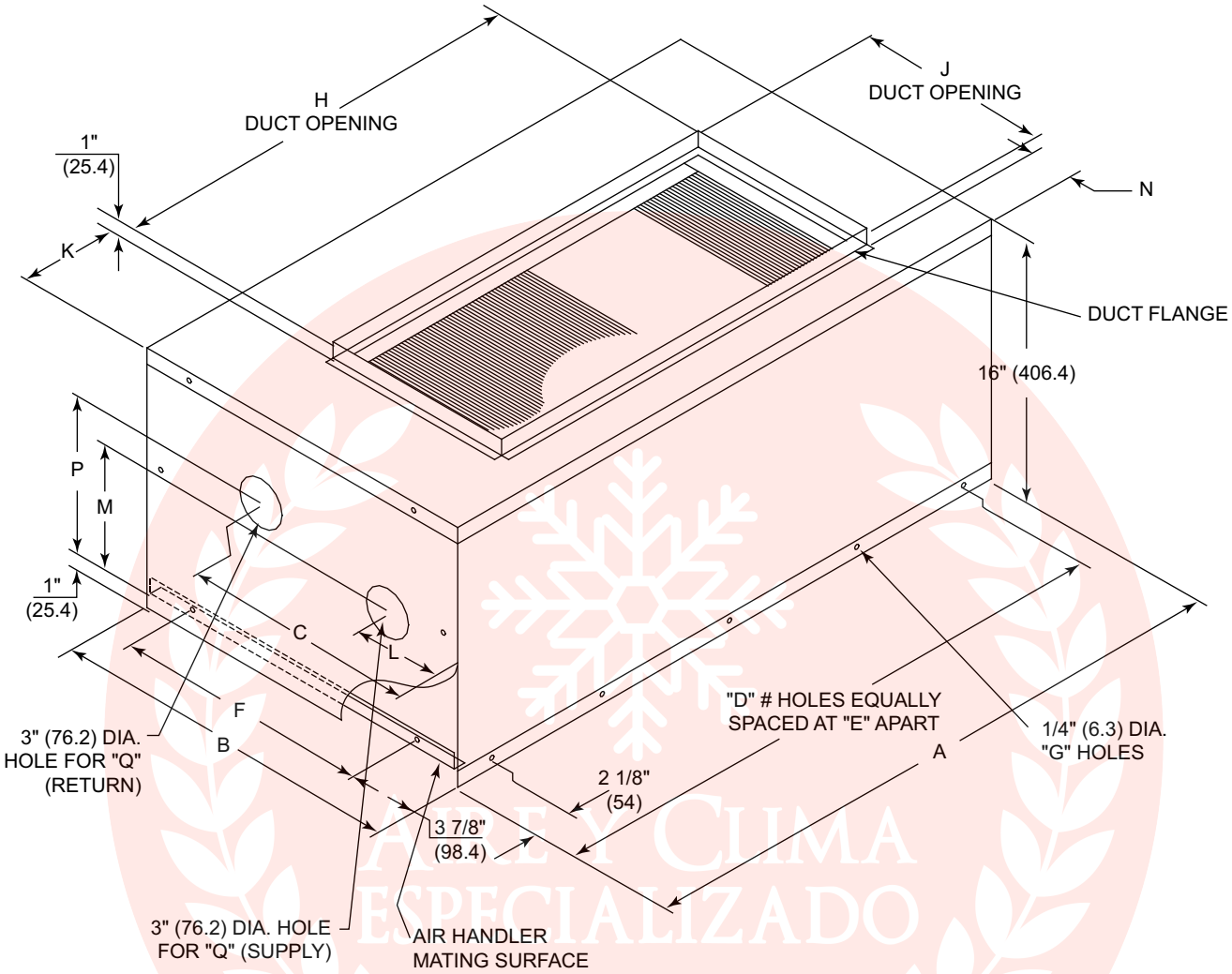

Note: *Duct flange available as kit. See accessories chapter for details.*

Table 63. Hot water coil accessory – in (mm)

Model No.	A	B	C	D	E	F	G	H
BAYWATR027	38.14 (969)	22.74 (576)	13.74 (349)	5 (127)	9 (229)	13.65 (347)	16 (406)	26 (660)
BAYWATR028	47.74 (1213)	25.74 (654)	15.95 (405)	5 (127)	10.84 (275)	17.17 (436)	16 (406)	30 (762)
BAYWATR029	63.84 (1621)	25.74 (654)	15.95 (405)	6 (152)	11.84 (301)	17.16 (436)	18 (457)	36 (914)
BAYWATR030	79.74 (2025)	29.18 (741)	14.36 (365)	8 (203)	10.85 (276)	19.67 (500)	22 (559)	51 (1295)
BAYWATR031	92.74 (2356)	31.24 (793)	16.48 (419)	8 (203)	10.85 (276)	19.67 (500)	22 (559)	64 (1626)
Model No.	**J**	**K**	**L**	**M**	**N**	**P**	**Q**	
BAYWATR027	12 (305)	6 (152)	4.94 (125)	7.79 (198)	2.88 (73)	10.24 (260)	2 NPT (51) NPTI	
BAYWATR028	18 (457)	8.88 (225)	8.45 (215)	10.27 (261)	2.88 (73)	7.77 (197)	2.5 NPTI (64) NPTI	
BAYWATR029	18 (457)	13.88 (352)	8.45 (215)	10.03 (255)	2.88 (73)	7.58 (192)	2.5 NPTI (64) NPTI	
BAYWATR030	18 (457)	14.25 (362)	6.86 (174)	9.91 (252)	1.88 (48)	7.41 (188)	2.5 NPTI (64) NPTI	

Table 63. Hot water coil accessory – in (mm) (continued)

Model No.	J	K	L	M	N	P	Q
BAYWATR031	18 (457)	14.25 (362)	8.98 (228)	9.88 (251)	3.75 (95)	7.38 (187)	2.5 NPTI (64) NPTI

Note: Hot Water Coil Dimensions - inches (millimeters)

Figure 34. Steam coil accessory – in (mm)

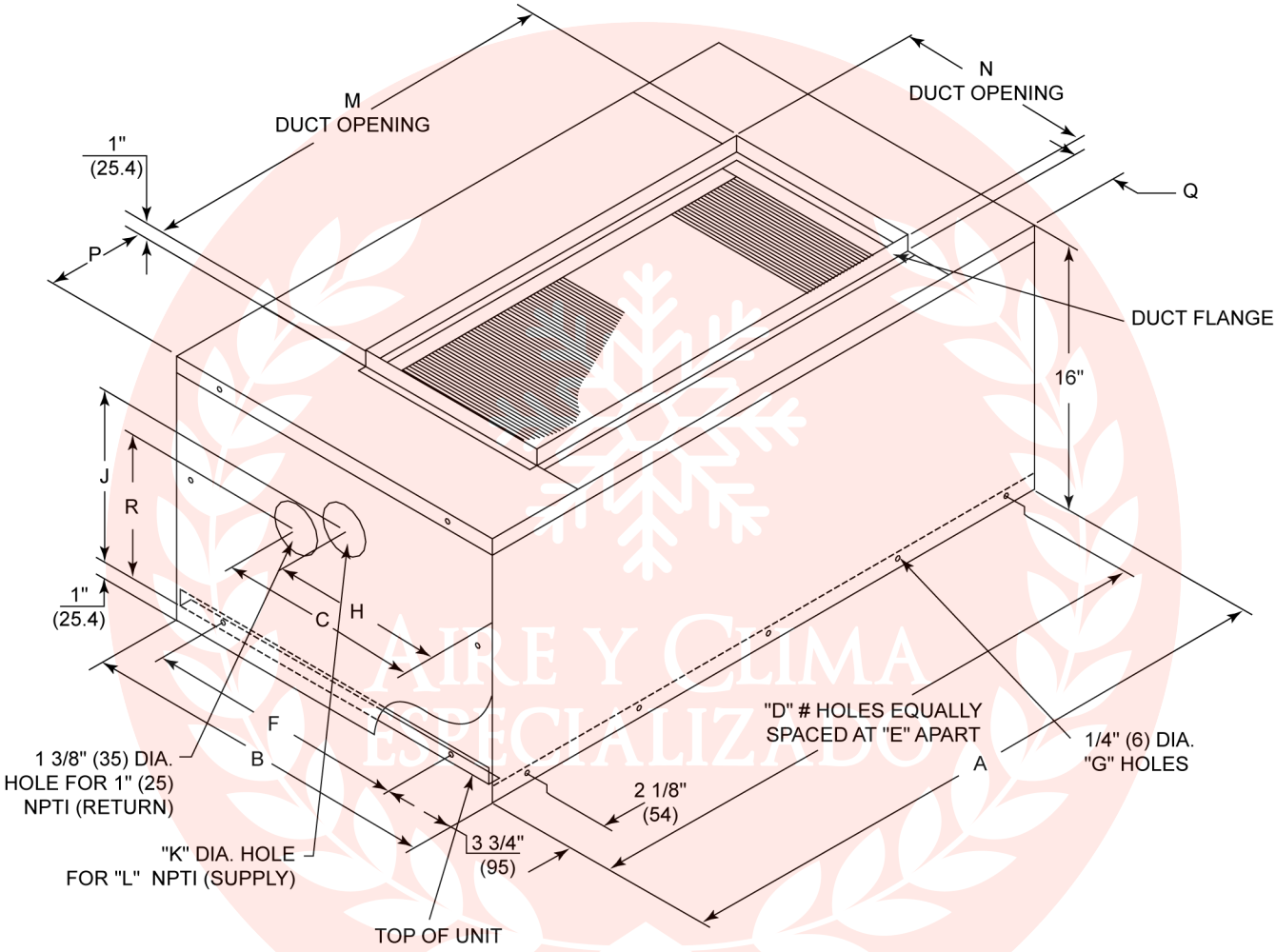

Note: *Duct flange available as kit. See accessories chapter for details.*

Table 64. Steam coil accessory – in (mm)

Model No.	A	B	C	D	E	F	G	H	J	K
BAYWATR022	38.14 (969)	22.74 (577)	14.32 (364)	5 (127)	9 (229)	13.67 (347)	16 (406)	10.88 (276)	11.17 (284)	2 (51)
BAYWATR023	47.74 (1212)	25.74 (654)	20.14 (511)	5 (127)	10.84 (275)	17.17 (436)	16 (406)	10.88 (276)	11.17 (284)	2 (51)
BAYWATR024	63.84 (1621)	25.74 (654)	20.14 (511)	6 (152)	11.87 (301)	17.16 (436)	18 (457)	13.70 (348)	10.57 (268)	2.5 (64)
BAYWATR025	79.74 (2025)	29.18 (741)	18.55 (471)	8 (203)	10.85 (275)	19.67 (500)	22 (559)	12.11 (308)	10.05 (255)	2.5 (64)
BAYWATR026	92.74 (2355)	31.24 (793)	20.67 (525)	8 (203)	10.85 (275)	19.67 (500)	22 (559)	14.23 (361)	10.01 (254)	2.5 (64)

Table 64. Steam coil accessory – in (mm) (continued)

Model No.	L	M	N	P	Q	R
BAYWATR022	1.5 (38)	26 (660)	12 (305)	6 (152)	2.87 (73)	9.95 (253)
BAYWATR023	2 (51)	30 (762)	18 (457)	8.87 (225)	2.87 (73)	9.95 (253)
BAYWATR024	2 (51)	36 (914)	18 (457)	13.87 (352)	2.87 (73)	9.13 (232)
BAYWATR025	2 (51)	51 (1295)	18 (457)	14.12 (359)	1.87 (48)	8.61 (219)
BAYWATR026	2 (51)	64 (1626)	18 (457)	14.12 (359)	3.75 (95)	8.58 (218)

Figure 35. Discharge plenum and grille accessory

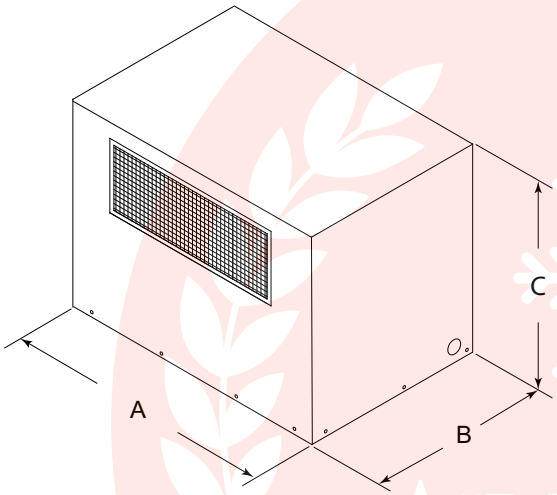

Table 65. Discharge plenum and grille dimensions – no heat – in (mm)

Unit	Model No.[a]	A	B	C
TWE060	BAYPLNM015	37.94 (963.6)	21.94 (557.2)	28 (711.2)
TWE072, TWE090	BAYPLNM016	47.5 (1206.5)	24.99 (634.7)	28 (711.2)
TWE120	BAYPLNM017	63.5 (1612.9)	24.99 (634.7)	28 (711.2)
TWE180	BAYPLNM018[b]	79.5 (2019.3)	27.63 (701.8)	22 (558.8)
TWE240	BAYPLNM019[b]	92.5 (2349.5)	30.43 (772.9)	24 (609.6)

[a] When installed horizontally, plenum/water coil must be self-supported.
[b] For use with hydronic heat or no heat.

AIRE Y CLIMA ARTESANADO

Figure 36. Discharge plenum and grille accessory

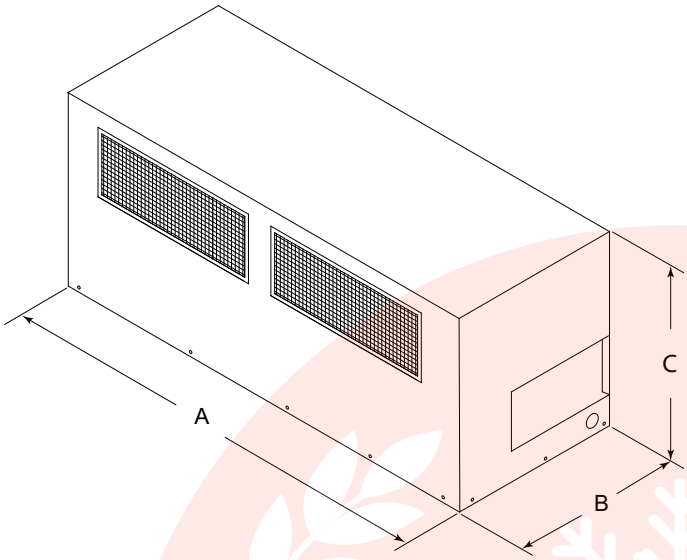

Table 66. Discharge plenum and grille dimensions (for use with electric heat) – in (mm)

Tons	Model No.	A	B	C
TWE060	BAYPLNM030	38.07 (967)	22.69 (576.3)	29.05 (738)
TWE072, TWE090	BAYPLNM031	47.86 (1216)	25.69 (652.5)	29.05 (738)
TWE120	BAYPLNM032	63.86 (1622)	25.69 (652.5)	29.05 (738)
TWE180	BAYPLNM033	80.14 (2036)	29.10 (739.1)	35.11 (892)
TWE240	BAYPLNM034	92.96 (2361)	31.10 (789.9)	35.05 (890)

Figure 37. Subbase accessory – in (mm)

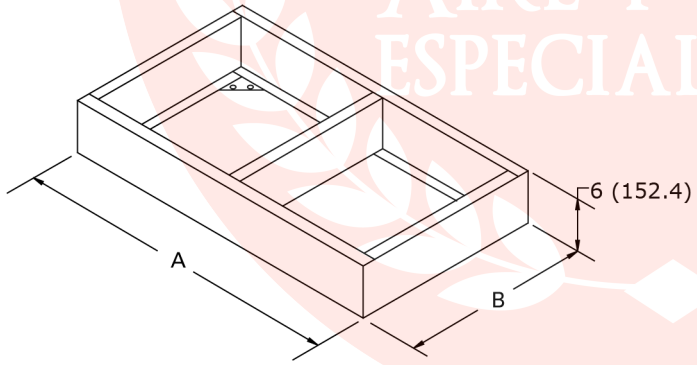

Table 67. Subbase dimensions – in (mm)

Tons	Model No.	A	B
TWE060	BAYBASE009	38 (965.2)	22.63 (574.8)
TWE072, TWE090	BAYBASE010	47.5 (1206.5)	25.51 (648.0)
TWE120	BAYBASE011	63.5 (1612.9)	25.52 (648.2)
TWE180	BAYBASE012	79.5 (2019.3)	29.04 (737.6)
TWE240	BAYBASE013	92.5 (2349.5)	31.14 (791.0)

AIRE Y CLIMA ESPECIALIZADO

Weights

Heat Pump Condenser

Table 68. TWA R-410A unit and corner weights — lbs (60 Hz)

Tons	Model No.	Shipping Max (lbs)	Net Max (lbs)	Corner Weights			
				1	2	3	4
6	TWA0724*A	360	323	95	95	66	67
	TWA0724*D	413	368	136	100	77	55
7.5	TWA0904*A	382	345	103	101	71	70
	TWA0904*D	466	421	152	114	89	66
10	TWA1204*A	495	450	119	131	95	105
	TWA1204*D	478	433	125	119	96	93
15	TWA1804*D	874	773	228	225	161	159
20	TWA2404*D	1003	902	269	268	183	182

Figure 38. TWA072, 090, 120

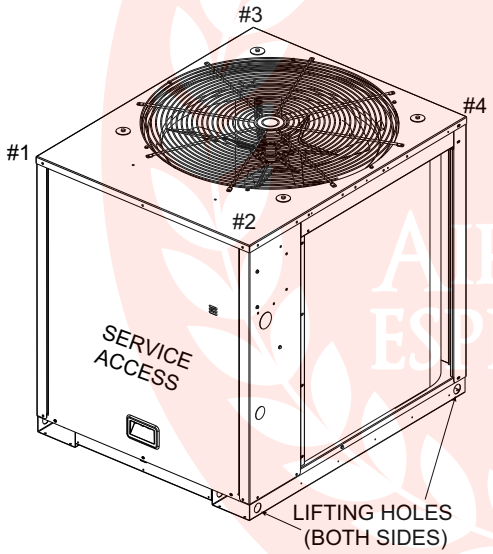

Figure 39. TWA180, 240

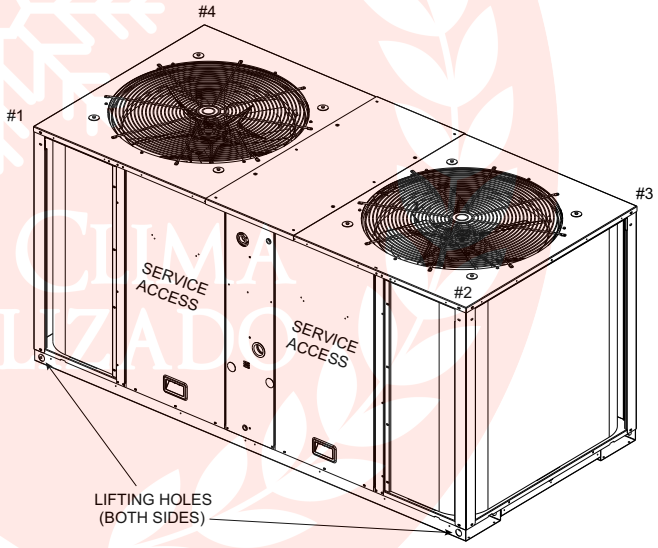

AIRE Y CLIMA ESPECIALIZADO

Air Handler

Table 69. Constant volume air handler (TWE) — unit and corner weights - (60 Hz)

Tons	Model Number	Shipping Max (lbs)	Net Max (lbs)	Corner Weights - Vertical				Corner Weights - Horizontal			
				1	2	3	4	1	2	3	4
5	TWE0604(3,4,W, 1)A TWE0604(3,4)B	285	232	55	71	51	55	54	67	50	61
7.5	TWE0904(1, K), 1A/B	385	323	67	99	75	82	56	92	87	88
10	TWE1204(1, K)A/B	441	393	77	121	110	85	79	118	77	119

Table 70. SZVAV and 2-Speed VFD air handler (TWE) — unit and corner weights - (60 Hz)

Tons	Model Number	Shipping Max (lbs)	Net Max (lbs)	Corner Weights - Vertical				Corner Weights - Horizontal			
				1	2	3	4	1	2	3	4
6	TWE0724*B	398	336	70	102	78	86	59	95	90	92
7.5	TWE0904*A/B	398	336	70	102	78	86	59	95	90	92
10	TWE1204*A/B	454	406	80	124	113	89	82	121	80	123
15	TWE1804*B	765	688	170	195	184	139	199	166	148	175
20	TWE2404*B	925	831	261	171	164	235	259	184	149	239

Figure 40. Vertical — TWE060, 072, 090, 120

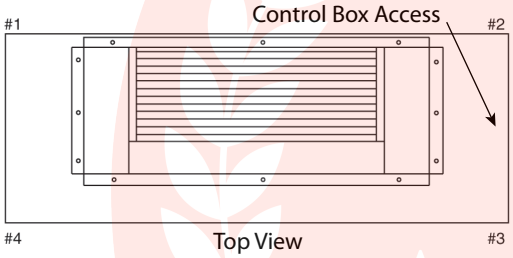

Figure 41. Vertical — TWE180, 240

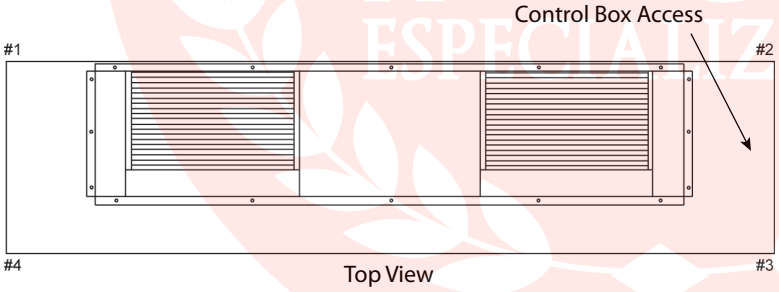

AIRE Y CLIMA ESPECIALIZADO

Figure 42. Horizontal — TWE060, 072, 090, 120

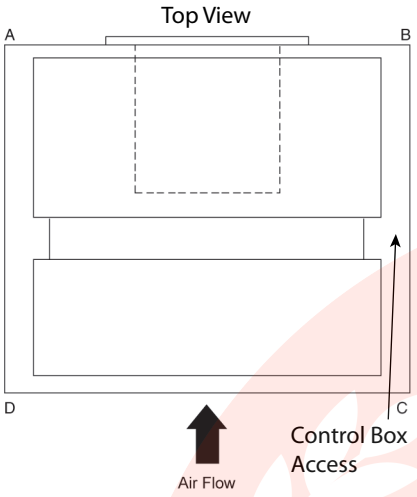

Figure 43. Horizontal — TWE180, 240

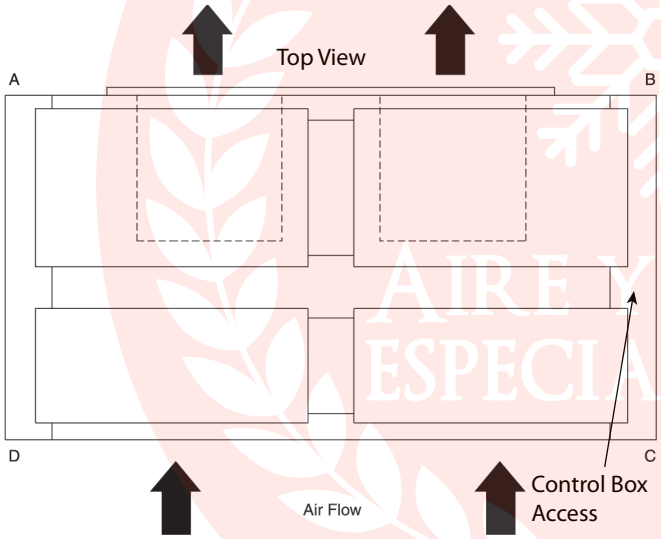

AIRE Y CLIMA ESPECIALIZADO

Accessories

Table 71. Accessory weights (net lbs.)

Unit Used w/ Tons	Hot Water Coil	Steam Coil	Discharge Plenum and Grille with Hydronic Heat	Discharge Plenum and Grille without Heat	Discharge Plenum and Grille with Electric Heat	Return Air Grille	Electric Heat Min/ Max	Subbase	Oversized Motor	RIS Isolator Floor Mount
6	116	131	78	73	160	5	27/45	19.4	48	2
7.5	116	131	78	73	160	5	27/45	19.4	48	2
10	165	148	97	92	195	7	27/45	23.5	50	2
15	211	234	—	230	235	10	79/100	28.4	80	2
20	242	261	—	145	265	12	79/100	31.7	88	2

RIS Isolator Suspended Mount	Steel Spring Isolator Floor Mount	Steel Spring Isolator Suspended Mount	Hail Guard	Control Transformer	Sensors	Expansion Module	Low Ambient	Service Valve
6	12	6	21	4	1	13	13	5
6	12	6	21	4	1	13	13	5
7	12	6	28	4	1	13	13	5
7	12	6	55	4	1	2	2	5
9	12	6	55	4	1	2	2	5

AIRE Y CLIMA ESPECIALIZADO

Mechanical Specifications

Condensing Units

Standard Features

General

- Weatherproofed steel mounting/lifting rails
- Hermetic scroll compressors
- Plate fin condenser coils
- Fans and motors
- Standard operating range 50-125°F (min. 0°F with low ambient accessory)
- Nitrogen holding charge
- Certified and rated in accordance with AHRI and DOE standards
- Certified to UL 60335-2-40
- Capacities and efficiencies for split systems are rated within the scope of the Air-Conditioning, Heating, & Refrigeration Institute (AHRI) certification program and display the AHRI Standard 340-360 (I-P) mark. This standard applies to units between 65,000 and 250,000 btu/hr.

Casing

- Zinc coated, heavy gauge, galvanized steel
- Weather resistant baked enamel finish
- Meets ASTM B117, 672 hour salt spray test
- Removable single side maintenance access panels
- Lifting handles in maintenance access panels
- Unit base provisions for forklift and/or crane lifting

Refrigeration System - Single Compressor (TWA072**A, TWA090**A, TWA120**A)

- Single refrigeration circuit with integral subcooling circuit
- Single direct drive hermetic scroll compressor
- Suction gas-cooled motor w/ ± 10% voltage utilization range of unit nameplate voltage
- Reversing valve
- Crankcase heater
- Internal temperature and current sensitive motor overloads
- No compressor suction and/or discharge valves (reduced vibration/sound)
- Factory installed liquid line filter drier
- Phase loss/reverse rotation monitor
- External high pressure cutout device
- External low pressure cutout device
- Evaporator defrost control
- Loss of charge protection (discharge temperature limit)

Refrigeration System - Dual Compressor (TWA072**D, TWA090**D, TWA120**D, TWA180**D, TWA240**D)

- Two (2) separate and independent refrigerant circuits
- Each refrigeration circuit equipped with integral subcooling circuit
- Two (2) direct drive hermetic scroll compressor
- Suction gas-cooled motors w/ ± 10% voltage utilization range of unit nameplate voltage
- Reversing valves
- Crankcase Heaters
- Internal temperature and current sensitive motor overloads
- Factory installed liquid line filter driers
- Phase loss/reverse rotation monitor
- No compressor suction and/or discharge valves (reduced vibration/sound)

- External high pressure cutout devices
- External low pressure cutout devices
- Evaporator defrost control
- Loss of charge protection (discharge temperature limits)

Condenser Coil (Fin and Tube)

- 3/8” internally enhanced copper tube
- Mechanically bonded to lanced aluminum plate fins
- Factory pressure and leak tested to 660 psig
- Perforated steel hail guards available (factory installed option or field installed accessory)

Condenser Fan

- 26" or 28" propeller fan(s)
- Direct drive
- Statically and dynamically balanced

Condenser Motor(s)

- Permanently lubricated totally enclosed or open construction
- Built-in current and thermal overloads
- Ball or sleeve bearing type

Controls

- Centralized microprocessor
- Indoor and outdoor temperature sensors drive algorithms, making decisions for all heating, cooling, and ventilation
- Integrated anti-short cycle timer
- Integrated time delay between compressors
- Completely internally wired
- Colored and keyed connectors and colored wires
- Contactor pressure lugs or terminal block
- Unit external mounting location for disconnect device
- Single point power entry

Coil Guards

- Condenser coil protection from hail, vandals, etc.
- Perforated, painted galvanized steel
- Factory or field installed

Factory Installed Options

Black Epoxy Coated Condenser Coil (Fin and Tube)

- Thermoset vinyl coating
- Bonded to aluminum fin stock (prior to fin-stamping process)
- Economical protectant in mildly corrosive environments

BACnet Communication Options

- BACnet MS/TP -BACnet IP
- Allows unit communication with Trane or generic BACnet building automation controls

Advanced Diagnostics and LonTalk Communication Interface

- Factory or field installed
- Allows unit communication as a Tracer Lon® device
- Allows unit communication with generic LonTalk® Network building automation controls

Field Installed Options

Low Ambient (Fan ON/OFF)

- Provides unit cooling operation to outdoor ambient of 0°F
- Low cost solution
- Discharge pressure controls condenser fan operation

Service Valves

- Liquid line service valve (with gauge port)
- Suction line service valve (with gauge port)

Vibration Isolators

- Neoprene-in-shear or spring flex choice
- Reduce vibration transmission to building structures, equipment, and adjacent spaces
- Reduce noise transmission to building structures, equipment, and adjacent spaces

Zone Sensor

- Interfaces with microprocessor units
- Manual or automatic programmable
- System malfunction lights
- Remote sensor options

Thermostat

- 1H/1C available
- 2H/1C available
- Manual or automatic changeover available
- Programmable and non-programmable solutions available

LonTalk Communication Interface

- Factory or field installed
- Allows unit communication as a Tracer Lon® device
- Allows unit communication with generic LonTalk® Network building automation controls

AIRE Y CLIMA ESPECIALIZADO

Air Handlers

Standard Features

General

- Completely factory assembled
- Convertible for horizontal or vertical configuration
- Convertible for cooling only or heat pump application
- Convertible for left or right external connections (refrigerant and/or electrical)
- Convertible for front or bottom air return
- Nitrogen holding charge
- Certified to UL 1995 for indoor blower coil units

Casing

- Zinc coated, heavy gauge, galvanized steel
- Weather resistant baked enamel finish
- Access panels with captive screws
- Completely insulated with foil faced, cleanable, fire retardant, permanent, odorless glass fiber material
- Captured or sealed insulation edges
- Electrical connection bushings or plugs
- Refrigerant connection bushings or plugs
- Withstand elevated internal static pressure

Refrigeration System

- Single or dual circuit
- Distributor(s)
- Thermal expansion valves (TXVs)

Evaporator Coil

- 3/8” internally enhanced copper tube mechanically bonded to lanced aluminum plate fins
- Factory pressure and leak tested to 449 psig.
- Draw-through airflow
- Dual circuits are interlaced/intertwined
- Double sloped, removable, cleanable, composite drain pan
- Four drain pan positions

Indoor Fan

- Double inlet, double width, forward curved, centrifugal type fan
- Dual fans on 15 – 20 ton air handlers
- Adjustable belt drive
- Permanently lubricated bearings

Indoor Motor

- Adjustable motor sheaves (constant volume units)
- Fixed motor sheaves (SZVAV and 2-Speed VFD)
- Thermal overload protection
- Permanently lubricated bearings
- Meet energy policy of 1992 (EPACT)
- Optional oversized motors for high static applications

Controls

- Completely internally wired
- Colored and keyed connectors, colored wires
- Magnetic indoor fan contactor
- Detachable low voltage connectors
- Single point power entry
- Evaporator defrost control

Filters

- Access from side coil panels
- Filters slide on rack
- One inch (1"), throwaway filters on 5 - 10 ton units
- Filter rack convertible to two inch (2") capability on 5 - 10 ton units
- Two inch (2"), throwaway filters on 15 – 20 ton units

Factory Installed Options

Constant Volume Airflow

Factory installed high static motor available

2-Speed VFD Control (Pairing with Legacy Electromechanical Condensers)

- 2–Speed airflow
- Variable Frequency Drive (VFD)
- Motor soft start — avoids start up belt noise and increases belt life
- Programmable keypad accessible outside of airstream
- VFD rated motor
- Factory installed high static motor available

AIRE Y CLIMA ESPECIALIZADO

Single Zone Variable Air Volume / 2–Speed Airflow

- Variable Frequency Drive (VFD)
- Motor soft start — avoids start up belt noise and increases belt life
- Programmable VFD keypad accessible outside of airstream
- Airflow adjustment via display/keypad on Symbio™ 700 controller in condenser
- Discharge air sensor
- Symbio 700 Options Module
- VFD rated motor
- Factory installed oversized motor available

Field Installed Options

Electric Heaters

- Heavy duty nickel chromium elements
- Agency approved
- Installs directly on fan discharge
- One or two stage control (dependent upon capacity)
- Single point power entry
- Terminal strip connections
- 460V Heaters
  - Internally wye connected
  - Automatic line break high limit controls with secondary single action disc limits
- 230V Heaters
  - Internally delta connected
  - Automatic reset of high limit controls through pilot duty with secondary backup fuse links

Hydronic Heat Coils

- One row steam
- Two row hot water
- Installs directly on fan discharge
- Heavy gauge sheet metal casing matches air handler
- Convertible for horizontal or vertical configurations

Discharge Plenums and Grilles

- Vertical, free discharge applications
- Heavy gauge sheet metal casing matches air handler
- Satin-finished, 4-way adjustable louver grilles

Return Air Grilles

- Vertical, free discharge applications
- Satin-finished, non-adjustable louver grilles
- Replaces front lower access panel

Mounting Sub-Base

- Vertical floor mount configuration requirement
- Heavy gauge sheet metal casing matches air handler
- Provides additional clearance for condensate drain trapping
- Required when isolators are used

Vibration Isolators

- Neoprene-in-shear or spring flex choice
- Floor or suspended applications
- Reduce vibration transmission to building structures, equipment, and adjacent spaces
- Reduce noise transmission to building structures, equipment, and adjacent spaces

AREA CLIMA ESPECIALIZADO

Oversize Motors

- High static applications
- Motor, sheaves, belt included

Filters

- 2 inch, MERV 13 high efficiency filters

AIRE Y CLIMA ESPECIALIZADO

AIRE Y CLIMA
ESPECIALIZADO

AIRE Y CLIMA
ESPECIALIZADO

The AHRI Certified mark indicates Trane U.S. Inc. participation in the AHRI Certification program. For verification of individual certified products, go to ahridirectory.org.

Trane - by Trane Technologies (NYSE: TT), a global innovator - creates comfortable, energy efficient indoor environments for commercial and residential applications. For more information, please visit trane. com or tranetechnologies.com.

Trane has a policy of continuous product and product data improvements and reserves the right to change design and specifications without notice. We are committed to using environmentally conscious print practices.

SSP-PRC023T-EN 26 Jun 2022
Supersedes SSP-PRC023R-EN (September 2021)

©2022 Trane