# SUBMITTAL DATA

TVR Smart – Mediun Static Pressure Duct

27.3kBtu/h – 220-240V/1Ph/50-60Hz DC Motor

Model: 4TVD0027RF000AA

| | | | |
|---|---|---|---|
| Job Name: | | Date: | |
| Reference: | | Location: | |

**Commercial Air Conditioner > TVR Smart > Indoor Unit > Medium Static Pressure Duct**

- **Overall Dimensions**

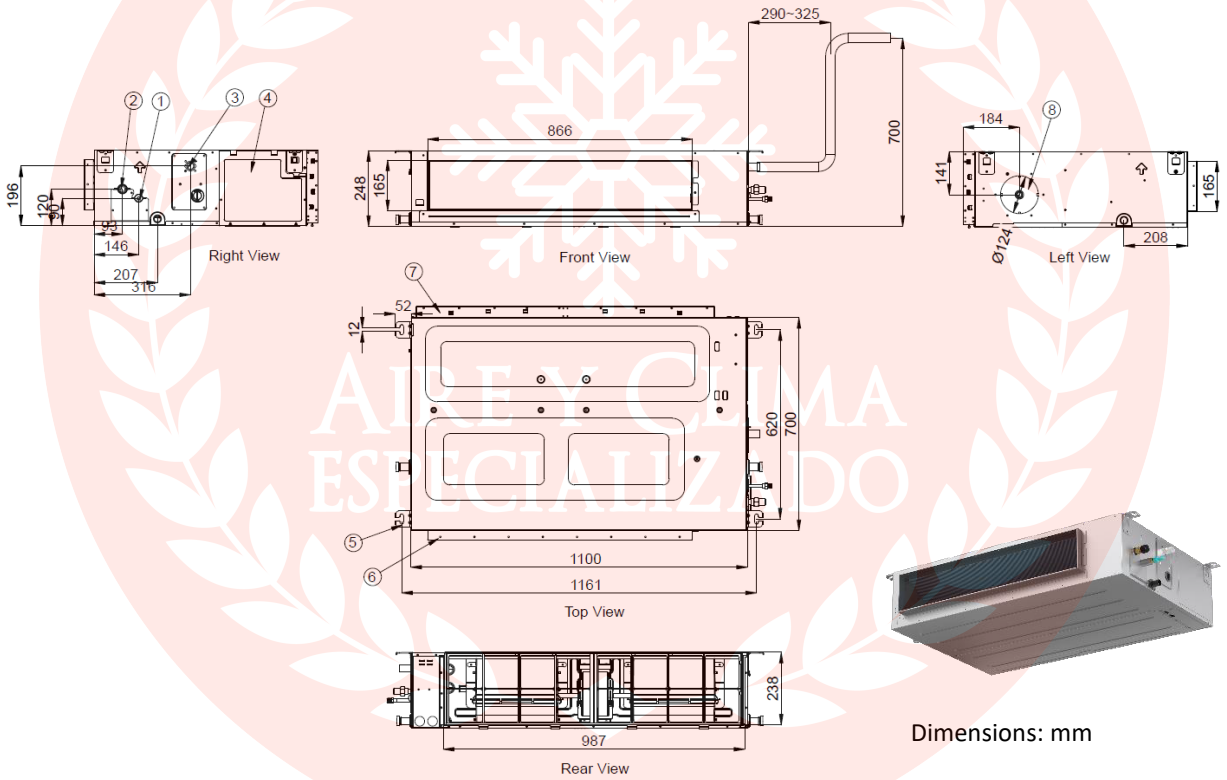


Dimensions: mm

| No. | Parts Name | No. | Parts Name |
|---|---|---|---|
| 1 | Liquid pipe connection | 5 | Suspension hanger |
| 2 | Gas pipe connection | 6 | Air outlet |
| 3 | Drain pipe connection | 7 | Air inlet |
| 4 | Electrical control box | 8 | Fresh air inlet |

© 2026 Trane All rights reserved

- **Installation Space Requirements**

The dimension of maintenance
Make sure that it is easy to demount the electrical control box, fan, montor, filter.

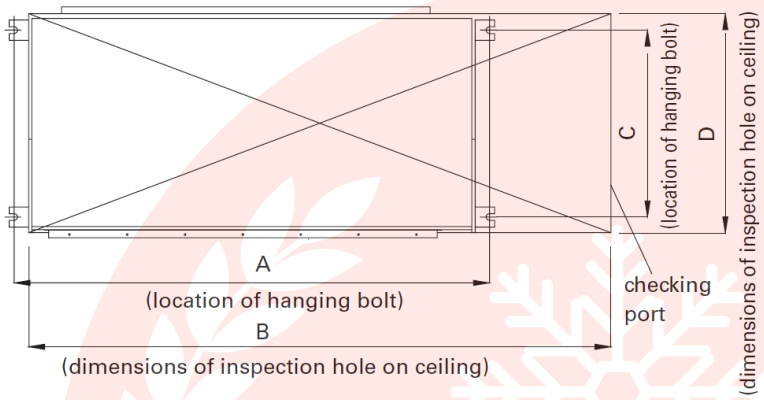


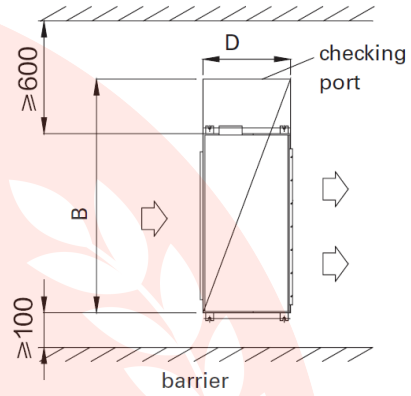


space needed for installation (unit:mm)

| A(mm) | B(mm) | C(mm) | D(mm) | E(mm) |
|---|---|---|---|---|
| 1161 | 1611 | 619 | 700 | 1100 |

Location relation between inspection hole on the ceiling and the unit and the hoisting studs (unit: mm).

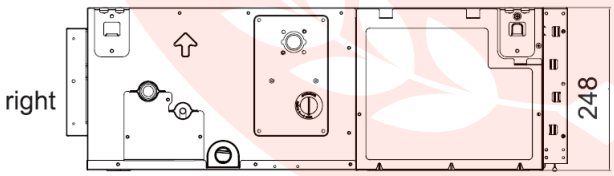


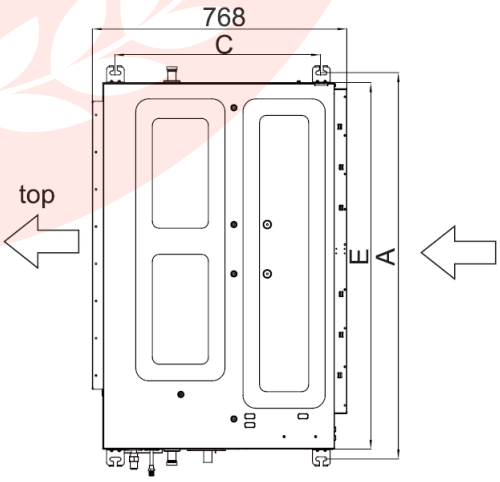


AIRE Y CLIMA ESPECIALIZADO

- **Specifications**

| Model | | | 4TVD0027RF000AA |
|---|---|---|---|
| Rated Cooling※1 | Capacity | kBtu/h | 27.3 |
| | Capacity | kW | 8.0 |
| | Power Input | kW | 0.150 |
| | Current | A | 1.17 |
| Rated Heating※1 | Capacity | kBtu/h | 30.7 |
| | Capacity | kW | 9.0 |
| | Power Input | kW | 0.150 |
| | Current | A | 1.17 |
| Power | Power Supply | Ph/V/Hz | 1/220~240/50/60 |
| | Power Cable | mm² | 3*2.5 |
| | Communication Cable ※2 | mm² | ≥2*0.75 |
| | Minimum Circuit Amps(MCA) | A | 1.32 |
| | Maximum Fuse Amps(MFA) | A | 16 |
| Fan Motor | Brand | - | SHANGQI/ BROAD-OCEAN |
| | Model | - | ZWF-115A/ ZW511B500104L |
| | Type | - | DC |
| | Power Input | W | 350 |
| | Power Output | W | 115 |
| | Full Load Amps(FLA) | A | 1.05 |
| | Quantity | - | 1 |
| | Insulation Class | - | B |
| | IP Class | - | IP44/IP40 |
| | Capacitor | μF | - |
| | Fan Speed (SH/H/M-H/M/M-L/L/Q) | rpm | 1010/1000/970/940/905/870/820 |
| Fan | Type | - | Cross flow fan |
| | Fan OD. Diameter | mm | Ø186 |
| | Number of Fans | - | 2 |
| Airflow Rate (SH/H/M-H/M/M-L/L/Q) | | $m^3/h$ | 1320/1275/1050/925/900/875/750 |
| | | CFM | 776/750/618/544/529/515/441 |
| Heat Exchanger | Number of Rows | - | 2 |
| | Tube Pitch | mm | 21 |
| | Row Pitch | mm | 13.3 |
| | Fin Spacing | mm | 1.4 |
| | Fin Material | - | Hydrophilic aluminum |
| | Tube Outside Diameter | mm | Ø7 |
| | Tube Type | - | Inner grooved |
| | Dimension (W*D*H) | mm | 865*338*26.6 |
| | Number of Circuits | - | 4 |
| Casing | Color | - | Uncoated |
| | Material | - | Galvanized steel plate |

© 2026 Trane All rights reserved

# SUBMITTAL DATA

TVR Smart – Mediun Static Pressure Duct

27.3kBtu/h – 220-240V/1Ph/50-60Hz DC Motor

Model: 4TVD0027RF000AA

| Model | | | 4TVD0027RF000AA |
|---|---|---|---|
| Salt Spray Test Duration | | Hour | 144 |
| Electrical Control Box IP Class | | - | IP20 |
| Construction | Sheet Metal Thickness | mm | 0.8 |
| | Drain Pan Material | - | EPS |
| | Drain Pan Insulation Class | - | HF-1 |
| | Drain Pump Head | mm | 1200 |
| | Branch Outlet Option | - | - |
| Indoor Wall | Material | - | Galvanized steel plate |
| | Thickness | mm | 0.8 |
| | Double or Single Skin | - | Single |
| Air Filter | Material | - | ABS+PET |
| | Mesh | - | 256 |
| | Pressure Drop | Pa | 5 |
| Pipe Dimension | Liquid Pipe OD. Diameter | mm | Ø9.52 |
| | Gas Pipe OD. Diameter | mm | Ø15.88 |
| | Pipe Connection Method | | Gas & Liquid pipe: flared joint |
| | Drainage Pipe Dimension | | DN25 |
| Fresh Air Hole Dimension(W*D/Diameter) | | mm | Ø124 |
| Air Inlet Dimensions (W*D) | | mm | 987*238 |
| Air Outlet Dimensions (W*D) | | mm | 866*165 |
| Weight | Net Weight | kg | 32.6 |
| | Gross Weight | kg | 39.1 |
| Sound Power Level (SH/H/M-H/M/M-L/L/Q) | | dB | 50/48/47/45/43/43/42 |
| Sound Pressure Level (SH/H/M-H/M/M-L/L/Q) | | dB (A) | 38/36/35/33/31/31/30 |
| External Static Pressure | | Pa | 180 |
| Standard Static Pressure | | Pa | 60 |
| Dimension | Net Dimension (W*D*H) | mm | 1100*700*248 |
| | Package Dimension (W*D*H) | mm | 1301*853*305 |

**Notes:**

※1 Rated condition:
Indoor temperature(cooling): 27°C DB/19°C WB, Outdoor temperature(cooling): 35°CDB/24°CWB.
Indoor temperature(heating): 20°C DB/15°C WB, Outdoor temperature(heating): 7°CDB/6°CWB.
The data is measured with 5m equivalent pipe and 0m height difference.
※2 Applying "Power off PMV control" function : 2 coresx1.5mm2 shielded line.No-applying "Power off PMV control" function: ≥2 coresx0.75mm2 shielded line.

Trane optimizes the performance of homes and buildings around the world.
The leader in creating and sustaining safe, comfortable and energy efficient environments.
Broad portfolio of advanced controls and HVAC systems, comprehensive building services, and parts.

For more information, visit www.trane.com.

© 2026 Trane All rights reserved