SUBMITTAL DATA

TVR Smart – Mediun Static Pressure Duct

9.6kBtu/h – 220-240V/1Ph/50-60Hz DC Motor

Model: 4TVD0009RF000AA

Job Name:		Date:	
Reference:		Location:	

Commercial Air Conditioner > TVR Smart > Indoor Unit > Medium Static Pressure Duct

- **Overall Dimensions**

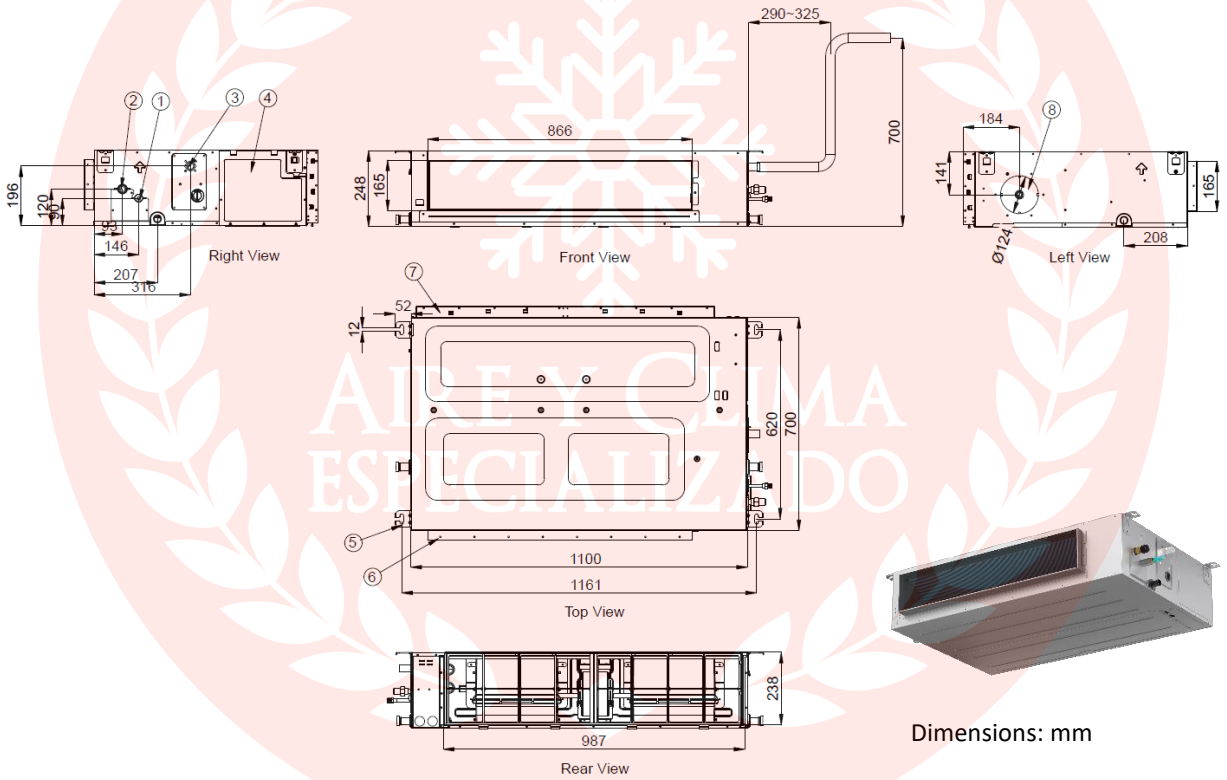

Dimensions: mm

No.	Parts Name	No.	Parts Name
1	Liquid pipe connection	5	Suspension hanger
2	Gas pipe connection	6	Air outlet
3	Drain pipe connection	7	Air inlet
4	Electrical control box	8	Fresh air inlet

© 2026 Trane All rights reserved

- **Installation Space Requirements**

The dimension of maintenance
Make sure that it is easy to demount the electrical control box, fan, montor, filter.

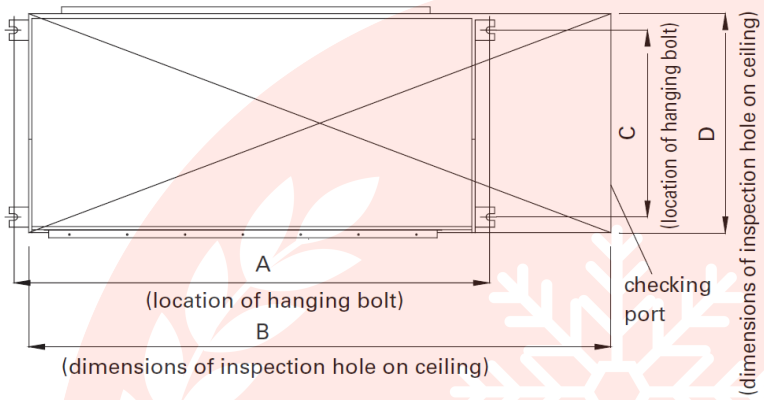

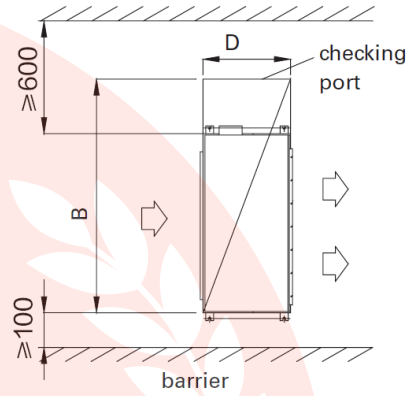

space needed for installation (unit:mm)

A(mm)	B(mm)	C(mm)	D(mm)	E(mm)
761	1211	619	700	700

Location relation between inspection hole on the ceiling and the unit and the hoisting studs (unit: mm).

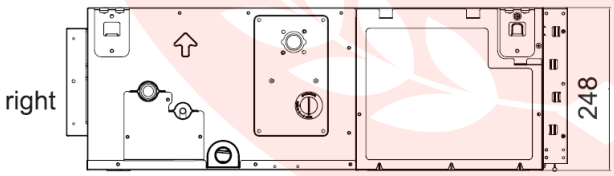

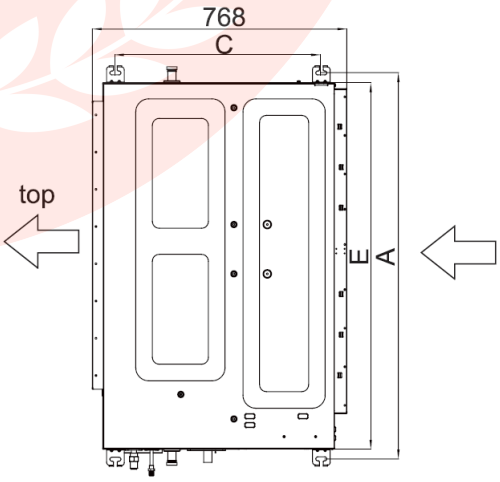

© 2026 Trane All rights reserved

- **Specifications**

Model			4TVD0009RF000AA
Rated Cooling※1	Capacity	kBtu/h	9.6
	Capacity	kW	2.8
	Power Input	kW	0.075
	Current	A	0.55
Rated Heating※1	Capacity	kBtu/h	10.9
	Capacity	kW	3.2
	Power Input	kW	0.075
	Current	A	0.55
Power	Power Supply	Ph/V/Hz	1/220~240/50/60
	Power Cable	mm²	3*2.5
	Communication Cable ※2	mm²	≥2*0.75
	Minimum Circuit Amps(MCA)	A	0.62
	Maximum Fuse Amps(MFA)	A	16
Fan Motor	Brand	-	WOLONG/ BROAD-OCEAN
	Model	-	WZD-A02130L-01AL/ ZW511B500130L
	Type	-	DC
	Power Input	W	220
	Power Output	W	130
	Full Load Amps(FLA)	A	0.50
	Quantity	-	1
	Insulation Class	-	B
	IP Class	-	IP40
	Capacitor	μF	-
	Fan Speed (SH/H/M-H/M/M-L/L/Q)	rpm	930/920/870/825/780/735/690
Fan	Type	-	Cross flow fan
	Fan OD. Diameter	mm	Ø186
	Number of Fans	-	1
Airflow Rate (SH/H/M-H/M/M-L/L/Q)		m^3/h	580/545/525/470/435/390/370
		CFM	341/320/308/276/256/229/218
Heat Exchanger	Number of Rows	-	2
	Tube Pitch	mm	21
	Row Pitch	mm	13.3
	Fin Spacing	mm	1.4
	Fin Material	-	Hydrophilic aluminum
	Tube Outside Diameter	mm	Ø7
	Tube Type	-	Inner grooved
	Dimension (W*D*H)	mm	465*338*26.6
	Number of Circuits	-	4
Casing	Color	-	Uncoated
	Material	-	Galvanized steel plate

AIRE Y CLIMA ESPECIALIZADO

© 2026 Trane All rights reserved

SUBMITTAL DATA

TVR Smart – Mediun Static Pressure Duct

9.6kBtu/h – 220-240V/1Ph/50-60Hz DC Motor

Model: 4TVD0009RF000AA

Model			4TVD0009RF000AA
Salt Spray Test Duration		Hour	144
Electrical Control Box IP Class		-	IP20
Construction	Sheet Metal Thickness	mm	0.8
	Drain Pan Material	-	EPS
	Drain Pan Insulation Class	-	HF-1
	Drain Pump Head	mm	1200
	Branch Outlet Option	-	-
Indoor Wall	Material	-	Galvanized steel plate
	Thickness	mm	0.8
	Double or Single Skin	-	Single
Air Filter	Material	-	ABS+PET
	Mesh	-	256
	Pressure Drop	Pa	5
Pipe Dimension	Liquid Pipe OD. Diameter	mm	Ø6.35
	Gas Pipe OD. Diameter	mm	Ø9.52
	Pipe Connection Method		Gas & Liquid pipe: flared joint
	Drainage Pipe Dimension		DN25
Fresh Air Hole Dimension(W*D/Diameter)		mm	Ø124
Air Inlet Dimensions (W*D)		mm	578*238
Air Outlet Dimensions (W*D)		mm	592*165
Weight	Net Weight	kg	24.5
	Gross Weight	kg	29.5
Sound Power Level (SH/H/M-H/M/M-L/L/Q)		dB	45/43/42/41/40/39/37
Sound Pressure Level (SH/H/M-H/M/M-L/L/Q)		dB (A)	33/31/30/29/28/27/25
External Static Pressure		Pa	180
Standard Static Pressure		Pa	60
Dimension	Net Dimension (W*D*H)	mm	700*700*248
	Package Dimension (W*D*H)	mm	901*853*305

Notes:

※1 Rated condition:
Indoor temperature(cooling): 27°C DB/19°C WB, Outdoor temperature(cooling): 35°CDB/24°CWB.
Indoor temperature(heating): 20°C DB/15°C WB, Outdoor temperature(heating): 7°CDB/6°CWB.
The data is measured with 5m equivalent pipe and 0m height difference.
※2 Applying "Power off PMV control" function : 2 coresx1.5mm2 shielded line.No-applying "Power off PMV control" function: ≥2 coresx0.75mm2 shielded line.

Trane optimizes the performance of homes and buildings around the world.
The leader in creating and sustaining safe, comfortable and energy efficient environments.
Broad portfolio of advanced controls and HVAC systems, comprehensive building services, and parts.

For more information, visit www.trane.com.

© 2026 Trane All rights reserved