Installation, Operation, and Maintenance

# Packaged Rooftop Air Conditioners Foundation™

## Cooling Only and Electric Heat
## 3 to 5 Tons, 60 Hz

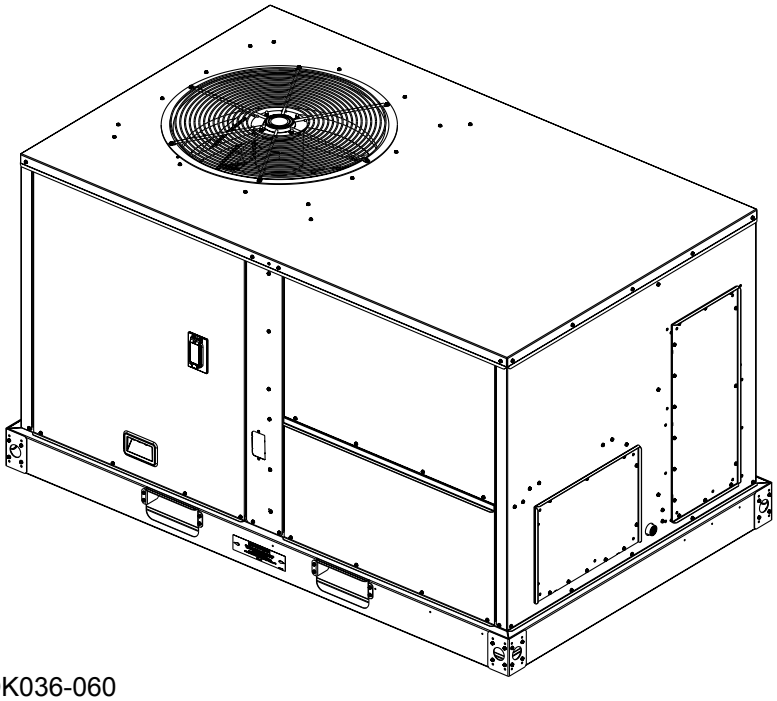

**Model Number:** EDK036-060

**⚠ SAFETY WARNING**

Only qualified personnel should install and service the equipment. The installation, starting up, and servicing of heating, ventilating, and air-conditioning equipment can be hazardous and requires specific knowledge and training. Improperly installed, adjusted or altered equipment by an unqualified person could result in death or serious injury. When working on the equipment, observe all precautions in the literature and on the tags, stickers, and labels that are attached to the equipment.

August 2024 **RT-SVX078B-EN**

# Introduction

Read this manual thoroughly before operating or servicing this unit.

## Warnings, Cautions, and Notices

Safety advisories appear throughout this manual as required. Your personal safety and the proper operation of this machine depend upon the strict observance of these precautions.

The three types of advisories are defined as follows:

| | |
|---|---|
| ⚠ WARNING | Indicates a potentially hazardous situation which, if not avoided, could result in death or serious injury. |
| ⚠ CAUTION | Indicates a potentially hazardous situation which, if not avoided, could result in minor or moderate injury. It could also be used to alert against unsafe practices. |
| ***NOTICE*** | Indicates a situation that could result in equipment or property-damage only accidents. |

### Important Environmental Concerns

Scientific research has shown that certain man-made chemicals can affect the earth's naturally occurring stratospheric ozone layer when released to the atmosphere. In particular, several of the identified chemicals that may affect the ozone layer are refrigerants that contain Chlorine, Fluorine and Carbon (CFCs) and those containing Hydrogen, Chlorine, Fluorine and Carbon (HCFCs). Not all refrigerants containing these compounds have the same potential impact to the environment. Trane advocates the responsible handling of all refrigerants.

### Important Responsible Refrigerant Practices

Trane believes that responsible refrigerant practices are important to the environment, our customers, and the air conditioning industry. All technicians who handle refrigerants must be certified according to local rules. For the USA, the Federal Clean Air Act (Section 608) sets forth the requirements for handling, reclaiming, recovering and recycling of certain refrigerants and the equipment that is used in these service procedures. In addition, some states or municipalities may have additional requirements that must also be adhered to for responsible management of refrigerants. Know the applicable laws and follow them.

**⚠ WARNING**

**Proper Field Wiring and Grounding Required!**

**Failure to follow code could result in death or serious injury.**

**All field wiring MUST be performed by qualified personnel. Improperly installed and grounded field wiring poses FIRE and ELECTROCUTION hazards. To avoid these hazards, you MUST follow requirements for field wiring installation and grounding as described in NEC and your local/state/national electrical codes.**

**⚠ WARNING**

**Personal Protective Equipment (PPE) Required!**

**Failure to wear proper PPE for the job being undertaken could result in death or serious injury.**

**Technicians, in order to protect themselves from potential electrical, mechanical, and chemical hazards, MUST follow precautions in this manual and on the tags, stickers, and labels, as well as the instructions below:**

- **Before installing/servicing this unit, technicians MUST put on all PPE required for the work being undertaken (Examples; cut resistant gloves/ sleeves, butyl gloves, safety glasses, hard hat/ bump cap, fall protection, electrical PPE and arc flash clothing). ALWAYS refer to appropriate Safety Data Sheets (SDS) and OSHA guidelines for proper PPE.**
- **When working with or around hazardous chemicals, ALWAYS refer to the appropriate SDS and OSHA/GHS (Global Harmonized System of Classification and Labelling of Chemicals) guidelines for information on allowable personal exposure levels, proper respiratory protection and handling instructions.**
- **If there is a risk of energized electrical contact, arc, or flash, technicians MUST put on all PPE in accordance with OSHA, NFPA 70E, or other country-specific requirements for arc flash protection, PRIOR to servicing the unit. NEVER PERFORM ANY SWITCHING, DISCONNECTING, OR VOLTAGE TESTING WITHOUT PROPER ELECTRICAL PPE AND ARC FLASH CLOTHING. ENSURE ELECTRICAL METERS AND EQUIPMENT ARE PROPERLY RATED FOR INTENDED VOLTAGE.**

**⚠ WARNING**

**Follow EHS Policies!**

**Failure to follow instructions below could result in death or serious injury.**

- **All Trane personnel must follow the company's Environmental, Health and Safety (EHS) policies when performing work such as hot work, electrical, fall protection, lockout/tagout, refrigerant handling, etc. Where local regulations are more stringent than these policies, those regulations supersede these policies.**
- **Non-Trane personnel should always follow local regulations.**

**⚠ WARNING**

**R-454B Flammable A2L Refrigerant!**

**Failure to use proper equipment or components as described below could result in equipment failure, and possibly fire, which could result in death, serious injury, or equipment damage.**
**The equipment described in this manual uses R-454B refrigerant which is flammable (A2L). Use ONLY R-454B rated service equipment and components. For specific handling concerns with R-454B, contact your local representative.**

***NOTICE***

**Water Damage!**

**Failure to follow instructions below could result in equipment and property damage.**
**Non-factory penetrations through the base of this unit are not allowed. Any penetration in the base of the unit may affect the water tight integrity of the unit and lead to water leaks into the conditioned space.**

## Overview of Manual

One copy of this document ships inside the control panel of each unit and is customer property. It must be retained by the unit's maintenance personnel.

***Important:*** *Do not release refrigerant to the atmosphere! If adding or removing refrigerant is required, the service technician must comply with all federal, state, and local laws.*

This booklet describes the proper installation, startup, operation, and maintenance procedures for air cooled systems.

By carefully reviewing the information within this manual and following the instructions, the risk of improper operation and/or component damage will be minimized.

It is important that periodic maintenance be performed to help assure trouble free operation. A maintenance schedule is provided at the end of this manual. Should equipment failure occur, contact a qualified service organization with qualified, experienced HVAC technicians to properly diagnose and repair this equipment.

## Copyright

This document and the information in it are the property of Trane, and may not be used or reproduced in whole or in part without written permission. Trane reserves the right to revise this publication at any time, and to make changes to its content without obligation to notify any person of such revision or change.

## Trademarks

All trademarks referenced in this document are the trademarks of their respective owners.

## Factory Training

Factory training is available through Trane University™ to help you learn more about the operation and maintenance of your equipment. To learn about available training opportunities contact Trane University™.

Online: www.trane.com/traneuniversity

Phone: 855-803-3563

Email: traneuniversity@trane.com

## Product Safety Information

This appliance is not intended for use by persons (including children) with reduced physical, sensory or mental capabilities, or lack of experience and knowledge, unless they have been given supervision or instruction concerning use of the appliance by a person responsible for their safety. Children should be supervised to ensure that they do not play with the appliance.

This appliance incorporates an earth connection for functional purposes only.

# Table of Contents


Model Number Description . . . . . 6

General Information . . . . . 7

Unit Inspection . . . . . 7

Exterior Inspection . . . . . 7

Inspection for Concealed Damage. . . . . 7

Unit Storage . . . . . 7

Unit Description . . . . . 7

Economizer Control Actuator Electromechanical Control . . . . . 8

JADE Economizer Control - Low Leak Economizer (LLE) Only . . . . . 8

System Input Devices and Functions . . . . . 8

Sensors . . . . . 8

Initiation of Operating Modes - JADE Controller . . . . . 9

Fan Failure Switch . . . . . 9

Dimensional Data. . . . . 10

Weights . . . . . 15

Rigging. . . . . 15

A2L Information . . . . . 16

A2L Work Procedures . . . . . 16

Servicing . . . . . 16

Leak Detection . . . . . 17

Refrigerant Removal and Evacuation . . . . . 17

Refrigerant Charging . . . . . 17

Decommissioning . . . . . 18

A2L Application Considerations. . . . . 18

Ignition Sources in Ductwork. . . . . 18

Ignition Sources in Unit . . . . . 18

Minimum Room Area Limits (Refrigerant charge greater than 3.91 lb per circuit) . . . . . 19

Leak Detection System(Refrigerant charge greater than 3.91 lb per circuit) . . . . . 20

Installation . . . . . 21

Unit Foundation . . . . . 21

Ductwork . . . . . 21

General Unit Requirements . . . . . 21

Factory Installed Economizer . . . . . 22

Main Electrical Power Requirements . . . . . 22

Electric Heat Requirements . . . . . 22

Condensate Drain Configuration . . . . . 22

Filter Installation . . . . . 22

Field Installed Power Wiring . . . . . 22

Main Unit Power . . . . . 22

Standard Wiring . . . . . 23

Optional TBUE Wiring (Through-the-Base Electrical Option) . . . . . 23

Control Power Transformer . . . . . 23

Controls using 24 Vac . . . . . 23

Voltage Imbalance . . . . . 24

Electrical Phasing (Three Phase Motors) . . . . . 24

Compressor Crankcase Heaters . . . . . 25

Checklist. . . . . 25

Factory-Mounted Unit Options . . . . . 26

Unit Disconnect (FIYUDC) . . . . . 26

Pre Start . . . . . 27

Verifying Proper Airflow (Units with Belt Drive Indoor Fan) . . . . . 27

Electromechanical Controls – Test Procedure . . . . . 27

Start-Up. . . . . 28

Standard Economizer Start-Up . . . . . 28

LLE Controls Test Procedure . . . . . 28

Compressor Start-Up . . . . . 28

Heating Start-Up . . . . . 29

Final System Set Up . . . . . 29

Maintenance . . . . . 30

Fan Belt Adjustment-Belt Drive Units . . . . . 30

Monthly Maintenance . . . . . 31

Filters . . . . . 31

Condensate Overflow Switch . . . . . 31

Cooling Season . . . . . 31

Heating Season . . . . . 31

Coil Cleaning . . . . . 32

Microchannel (MCHE) Coils . . . . . 32

Final Process . . . . . 32

Troubleshooting . . . . . 34

Standard Troubleshooting . . . . . 34

Failures. . . . . 34

Low Leak Economizer – (LLE) Troubleshooting . . . . . 34

Resetting Cooling and Heating Lockouts . . . . . 35

Method 1 . . . . . 35

Method 2 . . . . . 35

Condensate Overflow Switch . . . . . 35

Fan Failure Switch . . . . . 35


AIRE Y CLIMA ESPECIALIZADO

Unit Economizer Control (ECA) . . . . . 35
Error Code . . . . . 35
Wiring Diagrams . . . . . 36
Warranty . . . . . 37
For Commercial Unitary Equipment Rated 25 Tons and Under and Related Accessories. . . . . 37
Basic Warranty . . . . . 37
Exclusions and Limitations . . . . . 37

AIRE Y CLIMA
ESPECIALIZADO

# Model Number Description

**Digit 1 — Unit Function**

**E** = DX Cooling

**Digit 2 — Cooling Efficiency**

**D** = Standard Efficiency

**Digit 3 — Airflow Configuration/Refrigerant**

**K** = R-454B

**Digit 4, 5, 6 — Nominal Gross Cooling Capacity (MBh)**
**036** = 3 Ton
**048** = 4 Ton
**060** = 5 Ton

**Digit 7 — Major Design Sequence**

**A** = Rev A

**Digit 8 — Voltage Selection**

**3** = 208-230/60/3
**4** = 460/60/3
**5** = 575/60/3

**Digit 9 — Unit Controls**

**E** = Electromechanical

**Digit 10 — Heating Capacity**

**0** = No Heat
**A** = 5 kW Electric Heat
**B** = 7.5 kW Electric Heat
**C** = 10 kW Electric Heat
**D** = 14.4 kW Electric Heat
**E** = 20 kW Electric Heat
**F** = 25 kW Electric Heat

**Digit 11 — Minor Design Sequence**

**A** = Rev A

**Digit 12, 13 — Service Sequence**

**00** = None

**Digit 14 — Fresh Air Selection[2], [3]**

**0** = No Fresh Air

**A** = Manual Outside Air Damper 0-50%

**B** = Motorized Outside Air Damper 0-50%

**C** = Economizer, Dry Bulb 0-100% without Barometric Relief

**E** = Economizer, Reference Enthalpy 0-100% without Barometric Relief

**G** = Economizer, Comparative Enthalpy 0-100% without Barometric Relief

**J** = Downflow Low Leak Economizer, Dry Bulb without Barometric Relief

**K**= Downflow Low Leak Economizer, Dry Bulb with Barometric Relief

**L** = Downflow Low Leak Economizer, Reference Enthalpy without Barometric Relief

**M** = Downflow Low Leak Economizer, Reference Enthalpy, with Barometric Relief

**N** = Downflow Low Leak Economizer, Comparative Enthalpy without Barometric Relief

**P** = Downflow Low Leak Economizer, Comparative Enthalpy, with Barometric Relief

**Digit 15 — Supply Fan/Motor**

**0** = Standard Motor
**1** = Oversized Motor

**Digit 16 — Fork Access/Unit Access/Filters**

**0** = Standard Filters
**D** = 2-inch MERV 13 Filters

**Digit 17 — Coil Protection**

**0** = Standard Coil
**4** = CompleteCoat™ Condenser Coil

**Digit 18 — Through-the-Base Provisions**

**0** = No Through-the-Base Provisions
**A** = Through-the-Base Electric

**Digit 19 — Disconnect**

**0** = No Disconnect
**1** = Unit Mounted Non-Fused Disconnect Switch[1]

**Digit 20–24**

Not Used

**Digit 25 — System Monitoring Controls**

**0** = No Monitoring Controls
**A** = Condensate Drain Pan Overflow Switch

**Digit 26 — System Monitoring Controls**

**0** = No Economizer Fault Detection and Diagnostics (FDD)
**B** = Economizer Fault Detection and Diagnostics (FDD)[4]

**Model Number Notes**
**Notes:**

1. Must be ordered with Through the- Base Electrical option.
2. All Factory Installed Options are Built-to-Order. Check order services for estimated production cycle.
3. Factory installed economizers only available in downflow configuration.
4. Fault Detection and Diagnostics (FDD) is available on Low Leak Economizers only.

AIRCLIMA ESPECIALIZADO

# General Information

**⚠ WARNING**

**Fiberglass Wool!**

**Exposure to glass wool fibers without all necessary PPE equipment could result in cancer, respiratory, skin or eye irritation, which could result in death or serious injury. Disturbing the insulation in this product during installation, maintenance or repair will expose you to airborne particles of glass wool fibers and ceramic fibers known to the state of California to cause cancer through inhalation.**

**You MUST wear all necessary Personal Protective Equipment (PPE) including gloves, eye protection, a NIOSH approved dust/mist respirator, long sleeves and pants when working with products containing fiberglass wool.**

**Precautionary Measures:**

- **Avoid breathing fiberglass dust.**
- **Use a NIOSH approved dust/mist respirator.**
- **Avoid contact with the skin or eyes. Wear long-sleeved, loose-fitting clothing, gloves, and eye protection.**
- **Wash clothes separately from other clothing; rinse washer thoroughly.**
- **Operations such as sawing, blowing, tear-out, and spraying may generate fiber concentrations requiring additional respiratory protection. Use the appropriate NIOSH approved respirator.**

**First Aid Measures:**

- **Eye Contact - Flush eyes with water to remove dust. If symptoms persist, seek medical attention.**
- **Skin Contact - Wash affected areas gently with soap and warm water after handling.**

## Unit Inspection

To protect against loss due to damage incurred in transit, perform inspection immediately upon receipt of the unit. Check carefully for shipping damage. If any damage is found, report it immediately, and file a claim against the transportation company.

### Exterior Inspection

If the job site inspection reveals damage or material shortages, file a claim with the carrier immediately. Specify the type and extent of the damage on the bill of lading before signing. Notify the appropriate sales representative.

***Important:*** *Do not proceed with installation of a damaged unit without sales representative approval.*

- Inspect the complete exterior for signs of shipping damages to unit or packing material.
- Verify that the nameplate data matches the sales order and bill of lading.
- Verify that the unit is properly equipped and there are no material shortages.
- Verify the power supply complies with the unit nameplate specifications.

### Inspection for Concealed Damage

Inspect the components for concealed damage as soon as possible after delivery and before it is stored.

If concealed damage is discovered:

- Notify the carrier's terminal of the damage immediately by phone and by mail.
- Concealed damage must be reported within 15 days.
- Request an immediate, joint inspection of the damage with the carrier and consignee.
- Stop unpacking the unit.
- Do not remove damaged material from receiving location.
- Take photos of the damage, if possible.
- The owner must provide reasonable evidence that the damage did not occur after delivery.

## Unit Storage

Take precautions to prevent condensate from forming inside the unit's electrical compartments and motors if:

- The unit is stored before it is installed; or,
- The unit is set on the roof curb, and temporary heat is provided in the building. Isolate all side panel service entrances and base pan openings (e.g., conduit holes, S/A and R/A openings, and flue openings) from the ambient air until the unit is ready for start-up.

***Note:*** *Do not use the unit heater for temporary heat without first completing the start-up.*

The manufacturer will not assume any responsibility for equipment damage resulting from condensate accumulation on the unit electrical and/or mechanical components.

## Unit Description

Before shipment, each unit is leak tested, dehydrated, charged with refrigerant and compressor oil, and run tested for proper control operation.

Direct-drive, vertical discharge condenser fans are provided with built-in thermal overload protection. The stages of capacity control for these units are achieved by starting the Economizer Control Actuator (ECA).

## Economizer Control Actuator Electromechanical Control

The ECA monitors the mixed air temperature, return air temperature, minimum position setpoint (local or remote), power exhaust setpoint, $CO_2$ setpoint, $CO_2$, and ambient dry bulb/ enthalpy sensor or comparative humidity (return air humidity against ambient humidity) sensors, if selected, to control dampers to an accuracy of ±5 percent of stroke. The actuator is spring returned to the closed position any time that power is lost to the unit. It is capable of delivering up to 25 in.lb of torque and is powered by 24 Vac.

## JADE Economizer Control - Low Leak Economizer (LLE) Only

The JADE controller is a standalone economizer controller that provides outdoor air dry-bulb economizer control standard. With optional Sylk Bus sensors, the controller can provide comparative or reference enthalpy control. Dampers are controlled to an accuracy of ±3.2 percent of stroke. The actuator is spring returned to the closed position any time that power is lost to the actuator. It is capable of delivering up to 44 in.lb of torque and is powered by 24 Vac.

## System Input Devices and Functions

The unit must have a thermostat input in order to operate.

The descriptions of the following basic input devices used within the unit are to acquaint the operator with their function as they interface with the various features. Refer to the unit's electrical schematic for the specific device connections. The following controls are available from the factory for field installation.

### Drain Pan Condensate Overflow Switch (Optional)

This input incorporates the Condensate Overflow Switch (COF) mounted on the drain pan. When the condensate level reaches the trip point, the COF relay energizes and opens the 24 Vac control circuit, disabling the unit. A delay timer prevents the unit from starting for 3 minutes.

### Phase Monitor

The Phase Monitor is a three-phase line monitor module that protects against phase loss, phase reversal and phase unbalance. It is intended to protect compressors from reverse rotation. It has an operating input voltage range of 180 to 600 Vac, and LED indicators for **ON** and **FAULT**. There are no field adjustments and the module will automatically reset from a fault condition.

### Discharge Line Thermostat Control

When LSD is present in the unit, the high pressure controls and the discharge line thermostat signals are wired in series and connected to the safety input of the LSD. The compressor contactor coil is connected to the 'CC' terminal of the LSD. If the high pressure control switch or the discharge line thermostat is open, the 24 Vac signal to the SI input of the LSD is interrupted and the compressor contactor coil supply is disabled by the LSD. It has an automatic lockout.

### Power Exhaust Control (Optional)

The power exhaust fan is started whenever the position of the economizer dampers meets or exceed the power exhaust setpoint when the indoor fan is on.

The setpoint panel is located in the return air section and is factory set at 25% (50% for LLE).

To configure the LLE controller, set EXH1 SET (or EXH1 L and EXH1 H with two-speed fan) in the SETPOINTS menu. 2-speed fan mode requires AUX2 I set as W.

### Evaporator Frost Control (Optional)

This input incorporates the Frostat™ control (FOS) mounted in the indoor coil and can be activated by closing a field supplied contact installed in parallel with the FOS.

If this circuit is open before the compressor is started, the compressor will not be allowed to operate. Anytime this circuit is opened for 5 continuous seconds during compressor operation, the compressor for that circuit is immediately turned **Off**. The compressor will not be allowed to restart for a minimum of 3 minutes should the FOS close.

## Sensors

### High Temperature Sensor (BAYFRST003*)

This sensor connects to the Emergency Stop Input on the LTB and provides high limit shutdown of the unit. The sensor is used to detect high temperatures due to fire in the air conditioning or ventilation ducts. The sensor is designed to mount directly to the sheet metal duct. Each kit contains two sensors. The return air duct sensor (X1310004001) is set to open at 135°F.

The supply air duct sensor (X1310004002) is set to open at 240°F. The control can be reset after the temperature has been lowered approximately 25°F below the cutout setpoint.

### Thermostat – Programmable

This programmable, wall-mounted thermostat is a multi-stage 3 heat/2 cool, autochangeover digital display thermostat. It is a 7-day programmable stat with night setback.

### Thermostat – Non-Programmable

This non-programmable, wall-mounted thermostat is a multi-stage 3 heat/2 cool, auto changeover digital display thermostat. It can be used for economizer operation.

## $CO_2$ Sensor

This optional sensor can be added for Demand Control Ventilation (DCV) functionality. On units with a low leak economizer, configure the JADE controller by setting the following parameters:

### Setpoints Menu

DCV SET = desired $CO_2$ ppm to start DCV

VENTMAX = desired maximum position w/DCV and occupied status (2-speed applications require LO and HI settings)

VENTMIN = desired minimum position w/DCV and occupied status (2-speed applications require LO and HI settings)

ADVANCED SETUP Menu:

$CO_2$ ZERO = set to detectors start level

$CO_2$ SPAN = detector's max level minus start level

Attach the sensor to the $CO_2$ and **R** terminals (at customer connections).

***Note:*** *When using any 0 to 10 Vdc $CO_2$ sensor with the JADE you will need to set $CO_2$ ZERO to 400 ppm and the $CO_2$ SPAN to 1600 ppm in the **ADVANCED SETUP** menu.*

## Occupancy Sensor

A customer-supplied occupancy sensor can also be added to provide damper control based on occupied/unoccupied conditions.

## Low Leak Economizer Units

To configure the **JADE** controller, set:

**SYSTEM SETUP** menu: OCC = INPUT

Attach the occupancy sensor to the **OCC SENSOR** wire and **R** terminal (at customer connections). The occupancy sensor must utilize a normally open contact for proper operation.

If an occupancy sensor is not used, another option to controlling occupied and unoccupied status is to use the G input (fan is running). Connect the G input to the **OCC SENSOR** wire (at customer connections). The controller will then operate in the occupied mode every time the indoor fan is running.

## Initiation of Operating Modes - JADE Controller

The JADE controller is able to initiate the following modes: Compressor, Economizer, Fans, Heating System, and Cooling System.

The Compressor mode is initiated by either the OAT going above the **DRYBLB SET** setting or by the thermostat initiating a call to cool when the damper is at 100 percent open.The Economizer mode is controlled by the MAT getting above the **MAT SET** setting while the **OAT** is below the **DRYBLB SET** setting.

While the fans are not controlled by the controller, the Fan mode is dependent on what state the system is in (OCC or Y1 states will cause the damper to go to a **LOW** fan speed damper setting, while Y2 or W states will cause the controller to open the damper to the **HIGH** fan speed damper setting). The Heating System mode requires an input to the AUX2-1 terminal from the thermostat, and the Cooling System mode requires an input to the Y2 IN and/or the Y1 IN terminals from the thermostat.

## Fan Failure Switch

In electric heat mode, heaters will not be energized until differential pressure switch proves airflow. The factory set point is 0.07-inch w.c.

AIRE Y CLIMA ESPECIALIZADO

# Dimensional Data

Below figure illustrates the minimum operating and service clearances for either a single or multiple unit installation. These clearances are the minimum distances necessary to assure adequate serviceability, cataloged unit capacity, and peak operating efficiency.

Providing less than the recommended clearances may result in condenser coil starvation, short-circuiting of exhaust and economizer airflows, or recirculation of hot condenser air.

**Figure 1. Typical installation clearance for single and multiple unit applications**

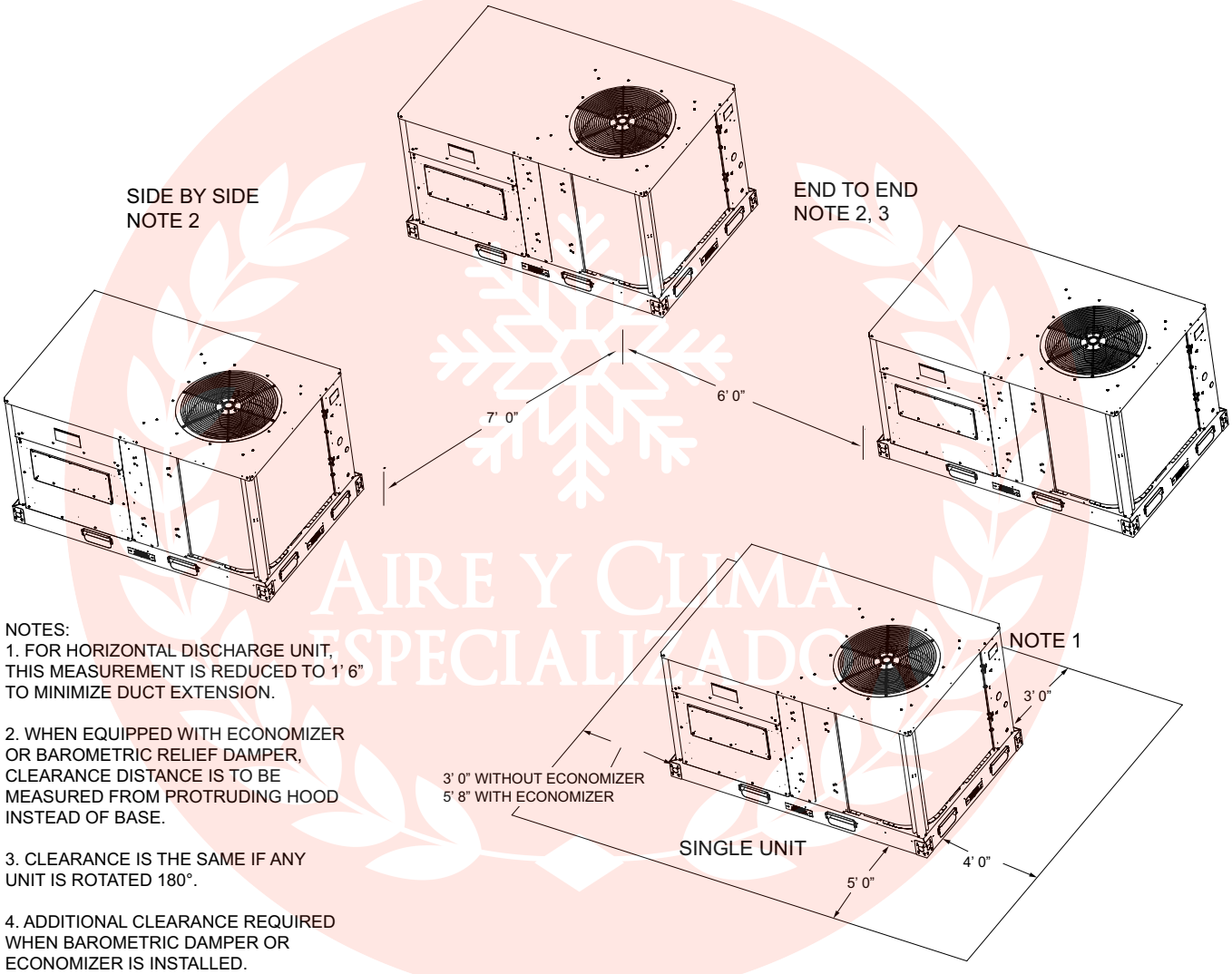


NOTES:
1. FOR HORIZONTAL DISCHARGE UNIT, THIS MEASUREMENT IS REDUCED TO 1' 6" TO MINIMIZE DUCT EXTENSION.

2. WHEN EQUIPPED WITH ECONOMIZER OR BAROMETRIC RELIEF DAMPER, CLEARANCE DISTANCE IS TO BE MEASURED FROM PROTRUDING HOOD INSTEAD OF BASE.

3. CLEARANCE IS THE SAME IF ANY UNIT IS ROTATED 180°.

4. ADDITIONAL CLEARANCE REQUIRED WHEN BAROMETRIC DAMPER OR ECONOMIZER IS INSTALLED.

AIRE Y CLIMA ESPECIALIZADO

**Figure 2. Cooling with optional electrical heat — overview (electric/electric)**

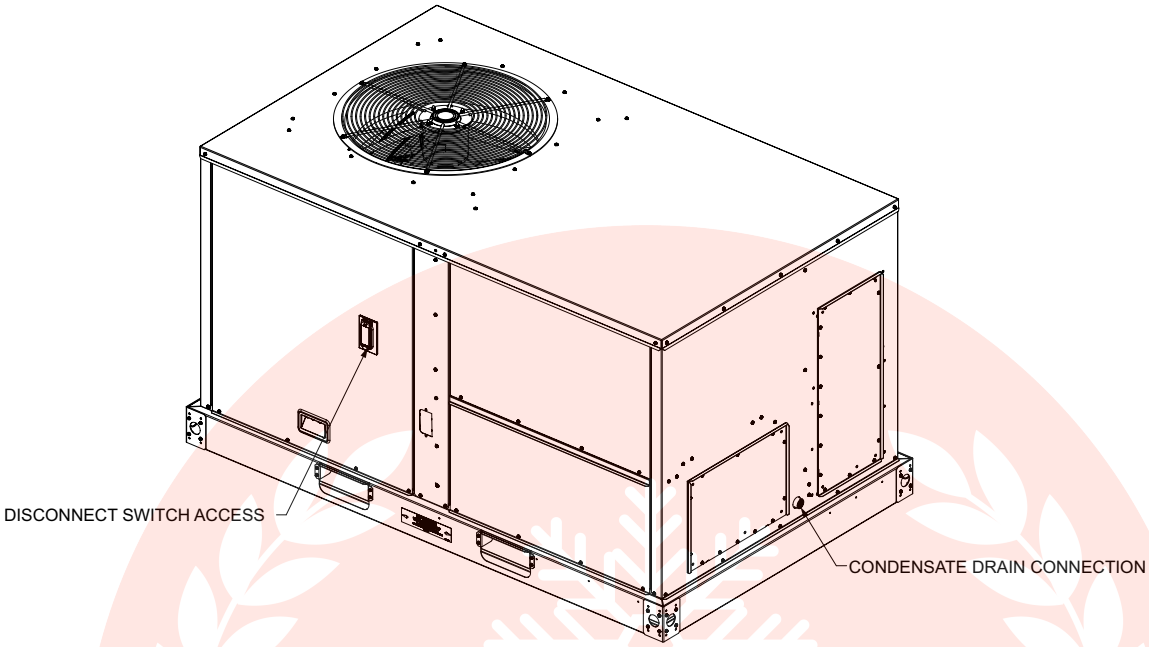


**Figure 3. Cooling with optional electrical heat — front and side views (electric/electric)**

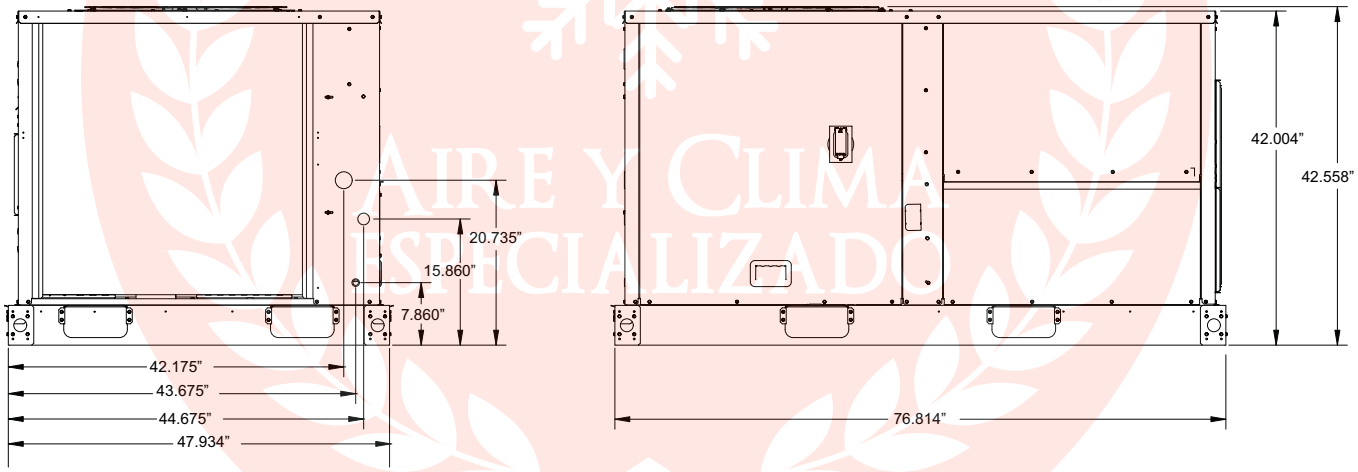


NOTES:
1. THROUGH THE BASE ELECTRICAL IS NOT STANDARD ON ALL UNITS.
2. VERIFY WEIGHT, CONNECTION, AND ALL DIMENSIONS WITH INSTALLER DOCUMENTS BEFORE INSTALLATION.

AIRE Y CLIMA ESPECIALIZADO

**Figure 4. Cooling with optional electrical heat and electric/electric units — bottom view**

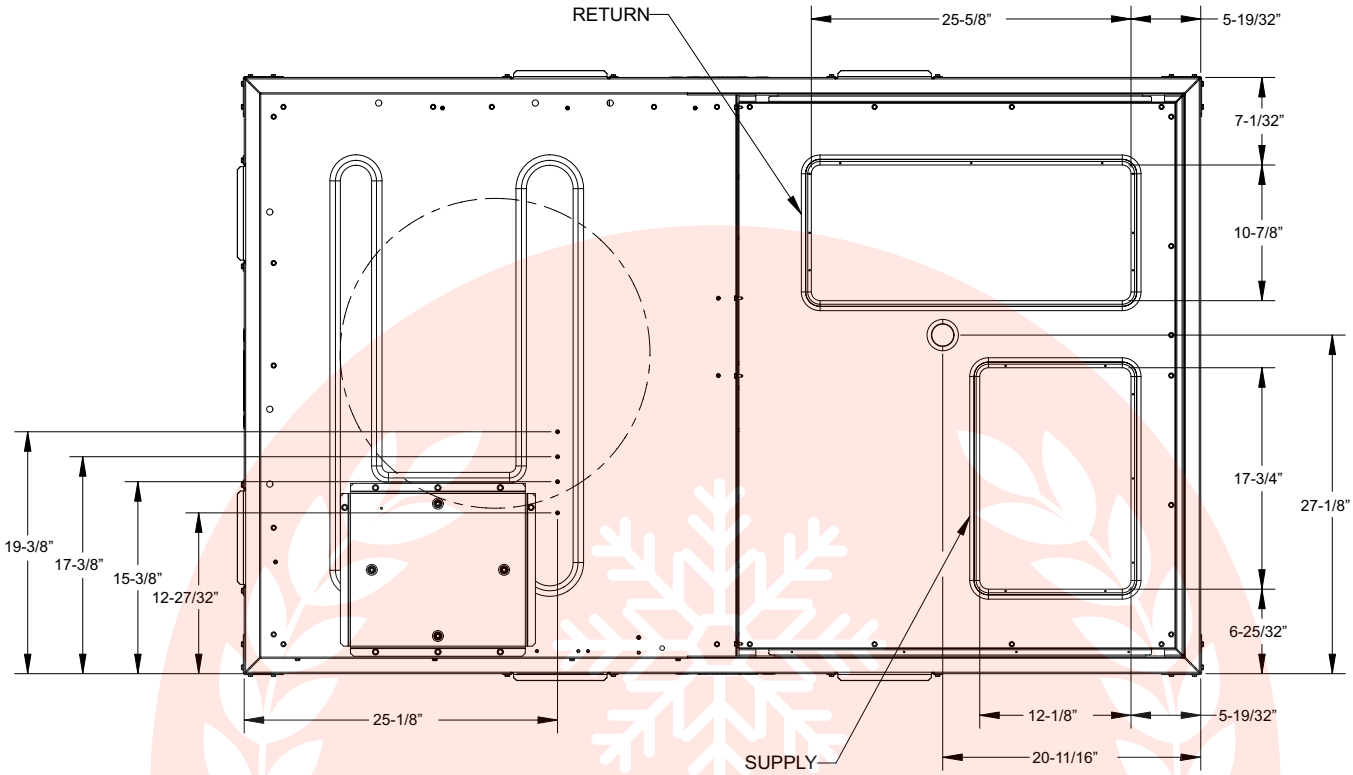


**Figure 5. Cooling with optional electrical heat and electric/electric units — back view (horizontal configuration)**

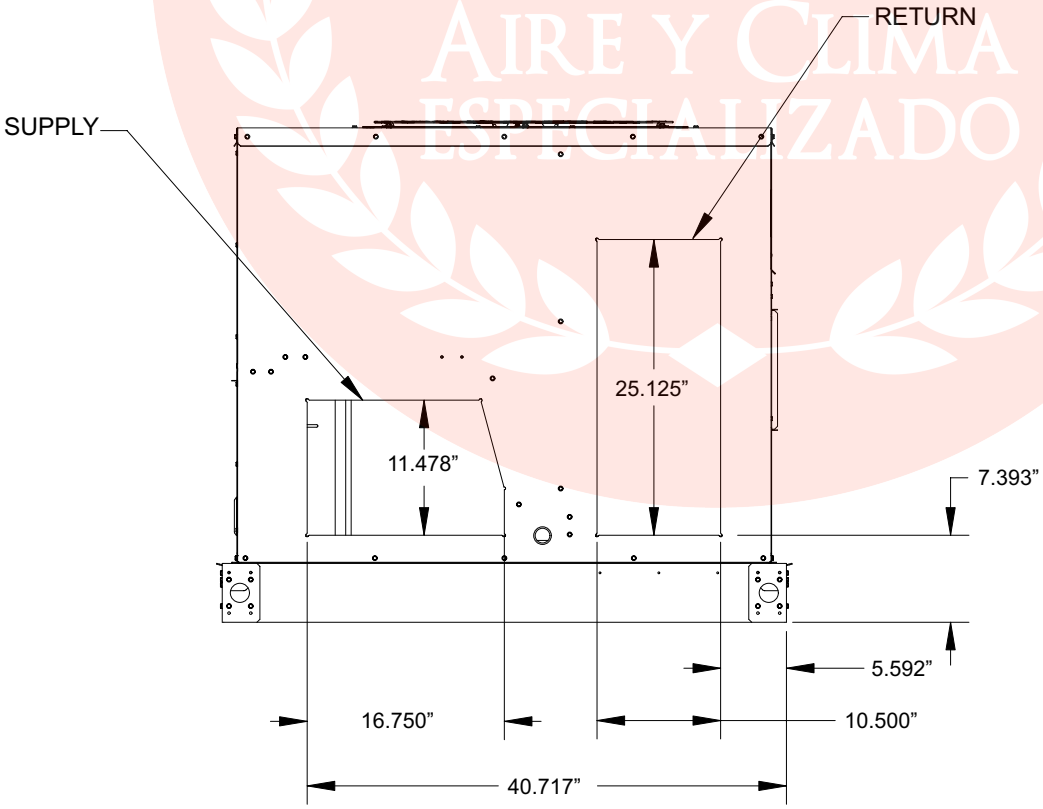


AIRE Y CLIMA ESPECIALIZADO

**Figure 6. Cooling with optional electrical heat and electric/electric units — roof curb**

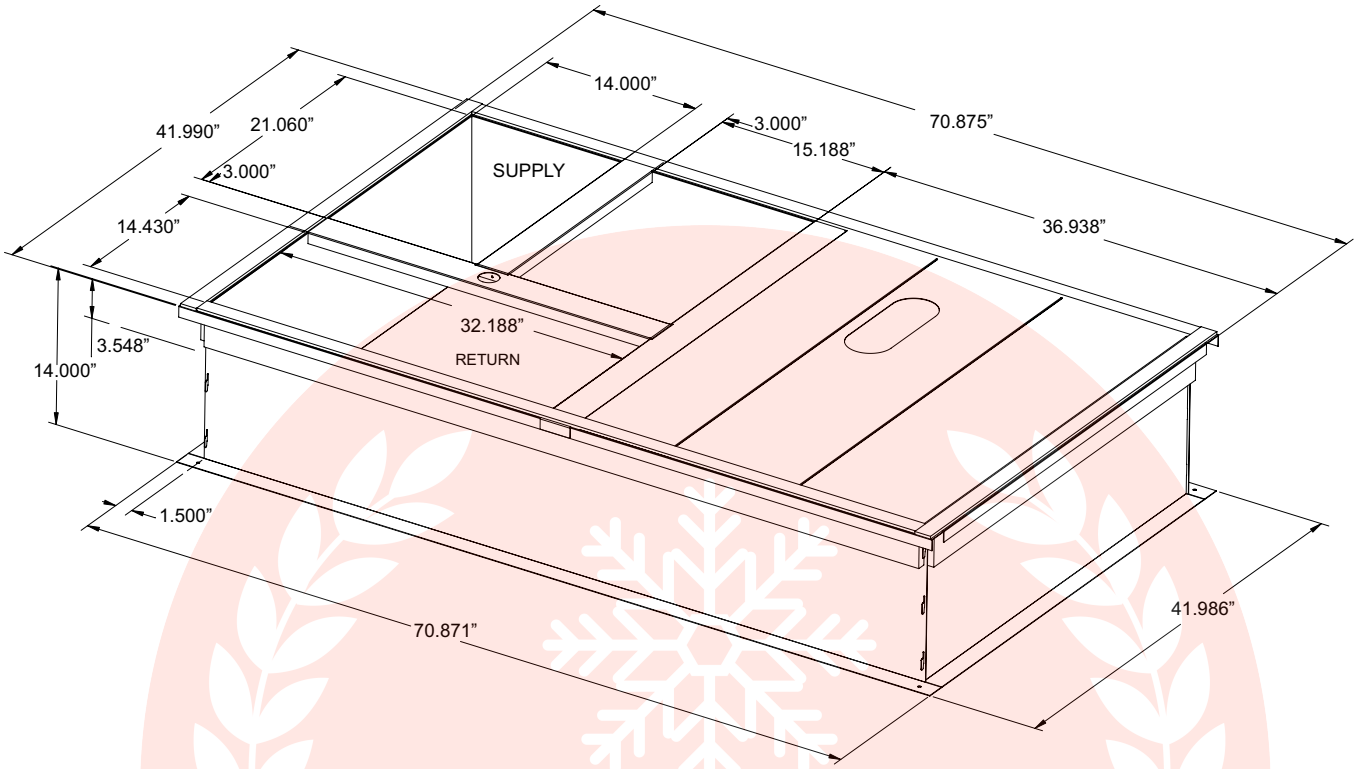


**Figure 7. Cooling with optional electrical heat and electric/electric units — downflow unit clearance**

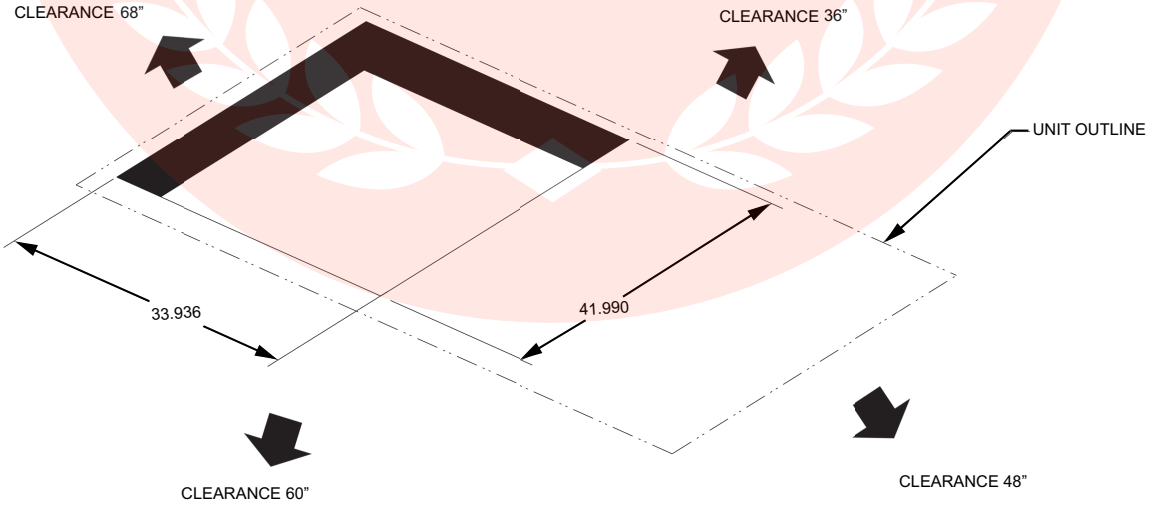


AIRE Y CLIMA ESPECIALIZADO

**Figure 8. Cooling with optional electrical heat and electric/electric units — barometric relief and economizer**

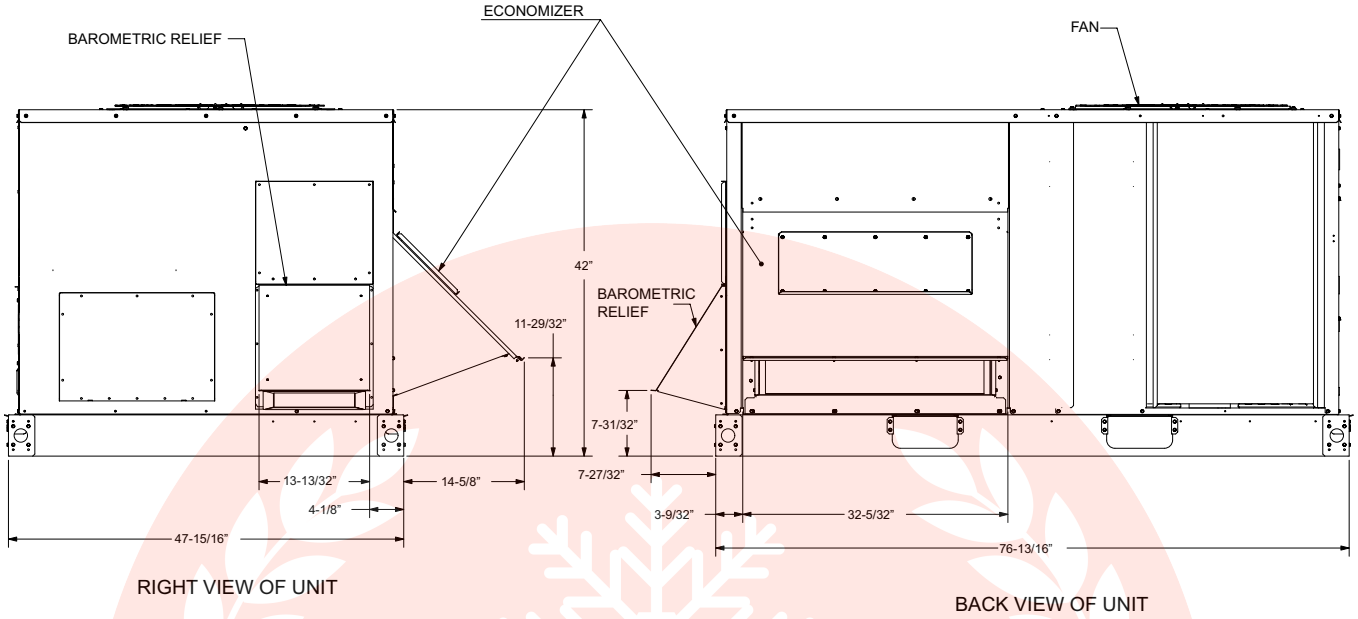


**Figure 9. Cooling with optional electrical heat and electric/electric units — manual damper**

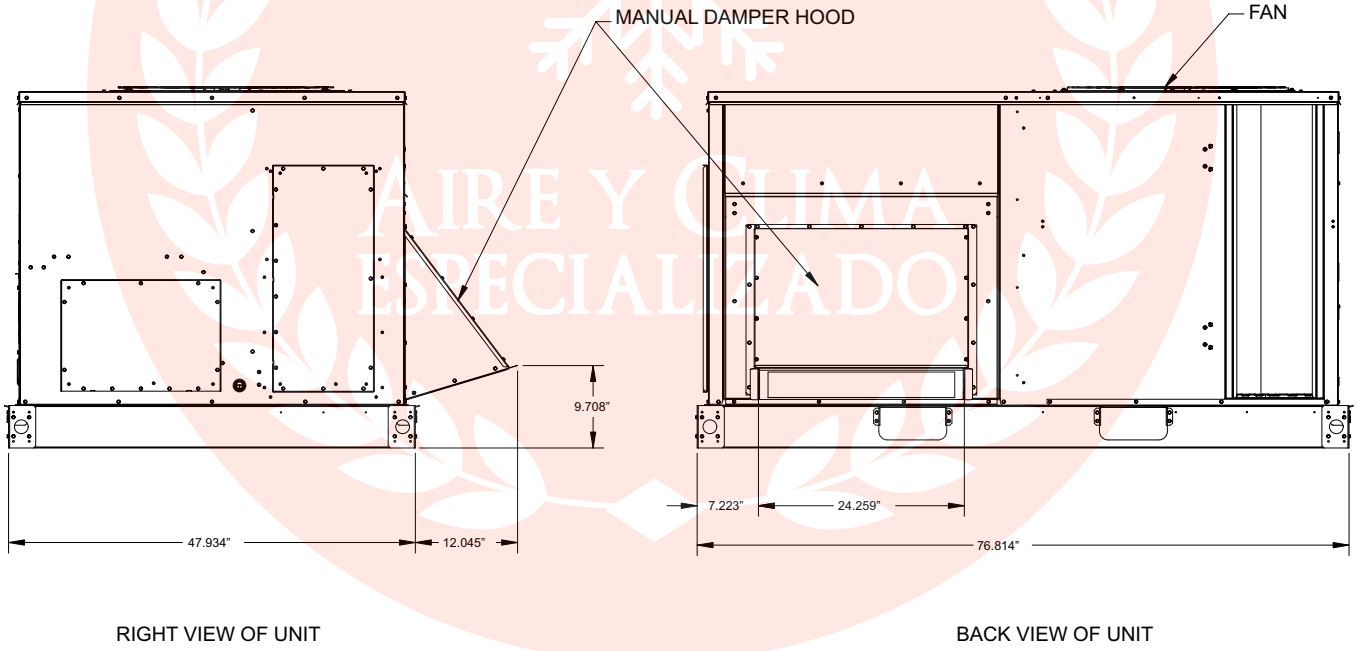


NOTE:
VERIFY WEIGHT, CONNECTION, AND ALL DIMENSIONS WITH INSTALLER DOCUMENTS BEFORE INSTALLATION.

AIRE Y CLIMA ESPECIALIZADO

# Weights

**Table 1. Maximum unit and corner weights (lb) and center of gravity dimensions (in.) cooling with optional electric heat (electric/electric) units only**

| Tons | Unit Model No. | Weights (lb)[a], [b] | | Corner Weights[c] | | | | Center of Gravity (in.) | |
|---|---|---|---|---|---|---|---|---|---|
| | | Shipping | Net | A | B | C | D | Length | Width |
| 3 | EDK036* | 523 | 473 | 87 | 98 | 153 | 135 | 41 | 29 |
| 4 | EDK048* | 566 | 516 | 103 | 107 | 155 | 150 | 39 | 28 |
| 5 | EDK060* | 586 | 536 | 112 | 112 | 156 | 156 | 38 | 28 |

(a) Weights are approximate.
(b) Weights do not include additional factory or field installed options/accessories.
(c) Corner weights are given for information only.

**Figure 10. Corner weights**

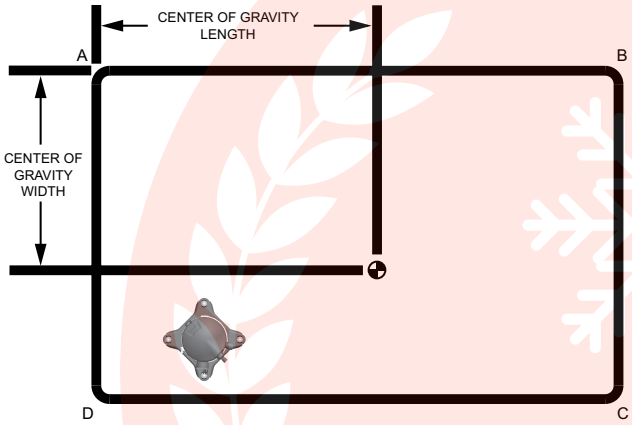


# Rigging

**⚠ WARNING**

**Heavy Object!**

**Failure to follow instructions below could result in unit dropping which could result in death or serious injury, and equipment or property-only damage.**

**Ensure that all the lifting equipment used is properly rated for the weight of the unit being lifted. Each of the cables (chains or slings), hooks, and shackles used to lift the unit must be capable of supporting the entire weight of the unit. Lifting cables (chains or slings) may not be of the same length. Adjust as necessary for even unit lift.**

**⚠ WARNING**

**Improper Unit Lift!**

**Failure to properly lift unit in a LEVEL position could result in unit dropping and possibly crushing operator/technician which could result in death or serious injury, and equipment or property-only damage.**

**Test lift unit approximately 24 inches (61 cm) to verify proper center of gravity lift point. To avoid dropping of unit, reposition lifting point if unit is not level.**

Refer to Figure 11, p. 15 and for typical unit operating weights rigging before proceeding.

1. Remove the shipping crate from around the unit. Do not remove the crating from the top of the unit.
2. Rig the unit as shown in Figure 11, p. 15. Attach adequate strength lifting slings to all four lifting brackets in the unit base rail. Do not use cables, chains, or slings except as shown.
3. Install a lifting bar, as shown in Figure 11, p. 15, to protect the unit and to facilitate a uniform lift. The minimum distance between the lifting hook and the top of the unit should be 7 feet.
4. Test-lift the unit to confirm it is properly rigged and balanced. Make any necessary rigging adjustments.
5. Lift the unit and position it into place.
6. Downflow units – align the base rail of the unit with the curb rail while lowering the unit onto the curb. Make sure that the gasket on the curb is not damaged while positioning the unit.

**Figure 11. Rigging and center of gravity data**

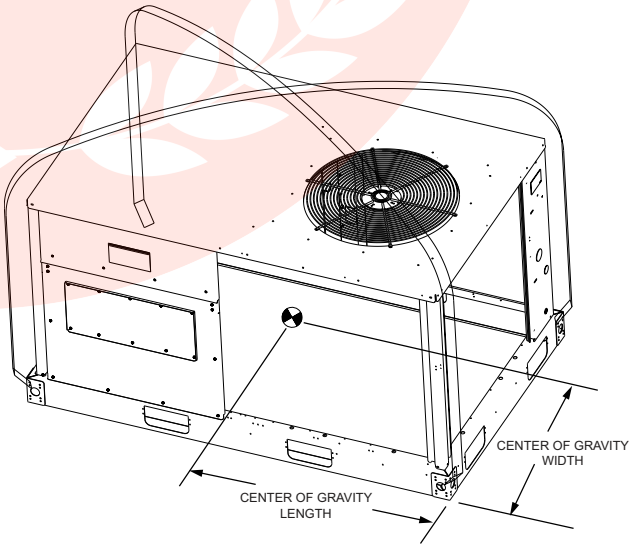


AIRE Y CLIMA ESPECIALIZADO

# A2L Information

## A2L Work Procedures

**⚠ WARNING**

**Risk of Fire — Flammable Refrigerant!**

**Failure to follow instructions below could result in death or serious injury, and equipment damage.**

- **To be repaired only by trained service personnel.**
- **Do not puncture refrigerant tubing.**
- **Dispose of properly in accordance with federal or local regulations.**

**⚠ WARNING**

**Refrigerant under High Pressure!**

**Failure to follow instructions below could result in an explosion which could result in death or serious injury or equipment damage.**
**System contains refrigerant under high pressure. Recover refrigerant to relieve pressure before opening the system. See unit nameplate for refrigerant type. Do not use non-approved refrigerants, refrigerant substitutes, or refrigerant additives.**

**⚠ WARNING**

**Hazardous Voltage!**

**Failure to disconnect power before servicing could result in death or serious injury.**
**Disconnect all electric power, including remote disconnects before servicing. Follow proper lockout/tagout procedures to ensure the power can not be inadvertently energized. Verify that no power is present with a voltmeter.**

The units described in this manual use R-454B refrigerant. Use ONLY R-454B rated service equipment or components with these units. For specific handling concerns with R-454B, contact your local Trane representative.

Installation, repair, removal, or disposal should be performed by trained service personnel.

At all times, Trane's maintenance and service guidelines shall be followed. If in doubt, contact Trane technical support for assistance.

### Servicing

Prior to initiating work on equipment, check the area with an appropriate refrigerant detector. Ensure the service personnel are properly trained regarding work in potentially toxic or flammable atmospheres. Ensure that the leak detection equipment being used is suitable for use with all applicable refrigerants, i.e. non-sparking, adequately sealed, or intrinsically safe. Be aware that the refrigerant does not contain an odor.

If any hot work is to be conducted on the refrigerating equipment or any associated parts, appropriate fire extinguishing equipment shall be available on hand. A dry powder or $CO_2$ fire extinguisher should be located adjacent to the charging area.

At all times, Trane's maintenance and service guidelines shall be followed. If in doubt, contact Trane technical support for assistance.

All maintenance staff and others working in the local area shall be instructed on the nature of the work being carried out. Work in confined spaces shall be avoided.

### Ignition Source Mitigation

Do not use any sources of ignition when working on the refrigeration system.

Keep all ignition sources, including cigarette smoking, away from the site of installation, repair, removal or disposal, during which refrigerant can potentially be released to the surrounding space.

Survey the area around the equipment before initiating work to ensure no flammable hazards or ignition risks are present.

"No Smoking" signs shall be displayed.

Do not use devices that can be a source of ignition to accelerate defrosting of components. Use only defrost and cleaning procedures recommended by Trane. Do not pierce or burn.

### Ventilation

Ensure that the area is in the open or that it is adequately ventilated before breaking into the system or conducting any hot work. A degree of ventilation shall continue during the period that the work is carried out. The ventilation should safely disperse any released refrigerant and preferably expel it externally into the atmosphere. If present, check that the ventilation system, including outlets, are operating adequately and are not obstructed.

### Refrigerating Equipment

Refrigerant piping or components should not be installed in locations where substances which may corrode them are present.

Check that equipment hazard markings are visible and legible. Replace them if they are not.

For equipment using secondary fluids, like water or glycol, check that refrigerant is not present in the secondary fluid loop before conducting any hot work.

### Electrical Devices

Do not apply power to the circuit if a fault exists which compromises safety. If the fault cannot be corrected immediately, but it is necessary to continue operation, an

adequate temporary solution shall be used. This shall be reported to the owner of the equipment, so all parties are advised.

Initial safety checks shall include:

- Cabling is not subject to wear, corrosion, excessive pressure, vibration, sharp edges, or any other adverse environmental effects. Account for the effects of aging or continual vibration from sources such as compressors or fans.
- Capacitors are discharged. This shall be done in a safe manner to avoid possibility of sparking.
- No live electrical components and wiring are exposed while charging, recovering, or purging the system.
- Verify continuity of earth bonding.
- Replace electrical components with Trane replacement parts, or those meeting the same ratings and qualified for flame arrest protection, UL LZGH2 category.

## Leak Detection

Never use an open flame to detect leaks. A halide torch should not be used. Use only approved leak detection methods per this instruction manual.

The following leak detection methods are deemed acceptable for all refrigerant systems.

Electronic leak detectors may be used to detect refrigerant leaks but, in the case of flammable refrigerants, the sensitivity may not be adequate, or may need re-calibration. (Detection equipment shall be calibrated in a refrigerant-free area.) Ensure that the detector is not a potential source of ignition and is suitable for the refrigerant used. Leak detection equipment shall be set at a percentage of the LFL gas (25% maximum) is confirmed.

Leak detection fluids are also suitable for use with most refrigerants but the use of detergents containing chlorine shall be avoided as the chlorine may react with the refrigerant and corrode the copper pipe-work.

Examples of leak detection fluids are:

- Bubble method
- Fluorescent method agents

If a leak is suspected, all naked flames shall be removed/ extinguished.

If a refrigerant leak is found which requires brazing, all refrigerant shall be recovered from the system, or isolated (by means of shut off valves) in a part of the system remote from the leak.

## Refrigerant Removal and Evacuation

When breaking into the refrigerant circuit to make repairs – or for any other purpose – conventional procedures shall be used. However, for flammable refrigerants it is important that best practice be followed, since flammability is a consideration.

The following procedure shall be adhered to:

1. Safely remove refrigerant following local and national regulations.
2. Evacuate.
3. Purge the circuit with inert gas.
4. Evacuate (optional for A2L).
5. Continuously flush or purge with inert gas when using flame to open circuit.
6. Open the circuit.

Prior to refrigerant removal, open all appropriate valves, including solenoid and electronic expansion valves (EXVs). Use control settings, where available. When not available, manually open all electronically controlled valves using acceptable service procedures.

The recovery equipment shall be in good working order with instructions available. Equipment shall be suitable for the recovery of the flammable refrigerant. For specific handling concerns, contact the manufacturer. Ensure all hose connections are checked for tightness to avoid refrigerant leaks.

The refrigerant shall be recovered into the correct recovery cylinders if venting is not allowed by local and national codes. Do not mix refrigerants in recovery unit and especially not in cylinders.

Refrigerant recovery unit should be purged with an inert gas after each use or before using with a different refrigerant Class – for example, A2L to A1.

If compressors or compressor oils are to be removed, ensure that they have been evacuated to an acceptable level to make certain that flammable refrigerant does not remain within the lubricant. The compressor body shall not be heated by an open flame or other ignition sources to accelerate this process. When oil is drained from a system, it shall be carried out safely.

The system shall be purged with oxygen-free nitrogen to render the appliance safe for flammable refrigerants. This process might need to be repeated several times. Compressed air or oxygen shall not be used for purging refrigerant systems.

The system shall be vented down to atmospheric pressure to enable work to take place.

The outlet for the vacuum pump shall not be close to any potential ignition sources, and ventilation shall be available.

## Refrigerant Charging

In addition to conventional charging procedures, the following requirements shall be followed.

- Ensure that contamination of different refrigerants does not occur when using charging equipment.
- Hoses or lines shall be as short as possible to minimize the amount of refrigerant contained in them.
- Cylinders shall be kept in an appropriate position according to the instructions.

- Ensure that the refrigerating system is earthed prior to charging the system with refrigerant.
- Label the system when charging is complete (if not already).
- Extreme care shall be taken not to overfill the refrigerating system.

Prior to recharging the system, it shall be pressure-tested with the appropriate purging gas. The system shall be leak-tested on completion of charging but prior to commissioning. A follow up leak test shall be carried out prior to leaving the site.

Prior to refrigerant charging, open all appropriate valves, including solenoid and electronic expansion valves (EXVs). Use control settings, where available. When not available, manually open all electronically controlled valves using acceptable service procedures.

## Decommissioning

Before carrying out the decommissioning procedure, it is essential that the trained service personnel is completely familiar with the equipment and all its details. It is recommended good practice that all refrigerants are recovered safely. Prior to the task being carried out, an oil and refrigerant sample shall be taken in case analysis is required prior to re-use of recovered refrigerant. It is essential that electrical power is available before the task is commenced.

1. Become familiar with the equipment and its operation.
2. Isolate system electrically.
3. Before attempting the procedure, ensure that:
    a. Mechanical handling equipment is available, if required, for handling refrigerant cylinders.
    b. All personal protective equipment is available and being used correctly.
    c. The recovery process is supervised at all times by a competent person.
    d. Recovery equipment and cylinders conform to the appropriate standards.
4. Pump down refrigerant system, if possible.
5. If a vacuum is not possible, make a manifold so that refrigerant can be removed from various parts of the system.
6. Make sure that cylinder is situated on the scales before recovery takes place.
7. Start the recovery machine and operate in accordance with instructions.
8. Do not overfill cylinders (no more than 80% volume liquid charge).
9. Do not exceed the maximum working pressure of the cylinder, even temporarily.
10. When the cylinders have been filled correctly and the process completed, make sure that the cylinders and the equipment are removed from site promptly and all isolation valves on the equipment are closed off.
11. Recovered refrigerant shall not be charged into another refrigerating system unless it has been cleaned and checked.
12. When equipment has been decommissioned, attach a signed label which includes the date of decommissioning.

# A2L Application Considerations

This product is listed to UL standard 60335-2-40, Household and Similar Electrical Appliances – Safety – Part 2-40: Particular Requirements for Electrical Heat Pumps, Air-Conditioners and Dehumidifiers, which defines safe design and use strategies for equipment using A2L refrigerants. This standard limits the refrigerant concentration in a space in the event of a refrigerant leak. To meet the requirements, the UL standard defines minimum room area, refrigerant charge limit, minimum circulation airflow and/or ventilation airflow requirements, and limits the use of ignition sources in spaces. The standard may require a unit refrigerant leak detection system.

For equipment with R-454B and charge amounts less than or equal to 3.91 lbs per circuit, this UL standard does not prescribe a room area limit and does not require a refrigerant leak detection system or any circulation airflow or ventilation airflow mitigation strategies. However, ignition sources in ductwork must be evaluated.

Depending on the application, a specific requirement of ANSI/ASHRAE Standard 15, Safety Standard for Refrigeration Systems, could be more stringent than UL 60335-2-40 requirements. See *Refrigeration Systems and Machinery Rooms Application Considerations for Compliance with ASHRAE® Standard 15-2022 Application Engineering Manual* (APP-APM001*-EN) for more information.

## Ignition Sources in Ductwork

Do not install open flames in the ductwork. Hot surfaces exceeding 700°C (1290°F) should not be installed in the ductwork unless the average airflow velocity is not less than 1.0 m\s (200 ft\min) across the heater and proof of airflow is verified before system is energized.

Electric heaters can exceed the surface temperature limit if airflow distribution is poor, or insufficient airflow is provided over the heater.

Surface temperatures of most gas heaters do not exceed the surface temperature limits due to ANSI construction requirements.

## Ignition Sources in Unit

This UL-listed unit does not contain any ignition sources. All potential ignition sources, (including factory or field installed accessory electric heaters, gas heaters, relays, and contactors) were evaluated during product UL listing.

## Minimum Room Area Limits (Refrigerant charge greater than 3.91 lb per circuit)

Equipment with R–454B charge amounts greater than 3.91 lb per circuit may require additional circulation or ventilation airflow mitigation strategies. In this case, two minimum room area ($A_{min}$) thresholds:

- The first threshold defines when equipment serving a single room is required to provide circulation airflow, either continuous or activated by a leak detection system. A ducted system requires circulation airflow unless the smallest room it serves is larger than the adjusted $A_{min}$ threshold. This product contains a leak detection system if a circuit charge is greater than 3.91 lbs. As a result, no further leak detection system evaluation is required.
- The second threshold defines when additional ventilation airflow is required. If the room area, A or TA, is below the adjusted $A_{min}$ or $TA_{min}$ threshold, additional ventilation is required to remove refrigerant in the event of a leak. Refer to UL 60335-2-40 Clause GG.8 and ANSI\ASHRAE Standard 15 Section 7 for natural and mechanical ventilation requirements.

**Table 2. Minimum room area**

| Unit | Charge | Minimum Room Area Limits Application |
|---|---|---|
| E/GDK036 | 3 | n/a |
| E/GDK048 | 3.3 | n/a |
| E/GDK060 | 3.9 | n/a |

## Minimum Room Area ($A_{min}$) Adjustments

Use equation below to adjust the minimum room area, as applicable, based on the unit's installation height, altitude, and occupancy level it serves.

$$A_{min.adj} = \text{Nameplate } A_{min} \times \text{Altitude Adj} \times \text{Height Adj} \times F_{occ}$$

Multiply the altitude adjustment factor in the table below by $A_{min}$ listed on the unit nameplate or in the Installation, Operation, and Maintenance (IOM) manual.

**Table 3. Altitude adjustment factor**

| Altitude (ft) | Sea Level to 2000 | 2001 to 4000 | 4001 to 6000 | 6001 to 8000 | 8001 to 10000 | 10001 to 12000 | 12001 to 14000 | 14001 to 15000 | Over 15000 |
|---|---|---|---|---|---|---|---|---|---|
| $A_{min}$ Adjustment | 1 | 1.05 | 1.11 | 1.17 | 1.24 | 1.32 | 1.41 | 1.51 | 1.57 |

In addition, $A_{min}$ can be adjusted if the unit is installed in a room at a height that is higher than the minimum height shown on the unit. To adjust $A_{min}$, multiply by the ratio of the unit minimum release height (in meters) / actual release height (in meters). Use 0.6 m in the ratio for unit minimum installation heights less than or equal to 0.6 m.

For institutional occupancies, ASHRAE Standard 15 applies an additional adjustment factor $F_{occ}$ to the amount of a charge allowed in a space. To calculate the adjusted $A_{min}$ for institutional occupancies, multiply the $A_{min}$ on the nameplate by two.

**EXAMPLE 1: 20 Ton Packaged Rooftop Multi-Zone VAV System Serving an Institutional Occupancy Space**

The packaged unit serves 7600 ft² of a nursing home located at an attitude of 4000 ft. The unit has two equally charged 10 ton refrigeration circuits. Each circuit has 12 lbs of refrigerant with a minimum room area requirement of 180 ft² with a 2.2 m release height.

$$TA_{min.adj} = 180\ ft^2 \times 1.05 \times 2 = 378\ ft^2$$

No additional ventilation is required.

**EXAMPLE 2: 10 Ton Split System Serving a Single Commercial Occupancy Space**

The split system serves a 1500 ft² manufacturing space at 5000 ft altitude. The final installed charge of the single circuit 10 ton unit is 20 lb. The unit has an open return with a release height of 1 m and ducted supply air. The unit $A_{min}$ is 660 ft².

$$A_{min.adj} = 660\ ft^2 \times 1.11 = 733\ ft^2$$

No additional ventilation is required.

## Determining Room Area (A or TA)

The room area (A) is the room area enclosed by the projection to the floor of the walls, partitions, and doors of the space that the equipment serves. For ducted systems, total room area (TA) of all rooms connected by ducts, may be used instead of A.

Rooms connected by drop ceilings only are not considered a single room.

Rooms on the same floor of the building, and connected by an open passageway, can be considered part of the same

room if the passageway is a permanent opening, extends to the floor and is intended for people to walk through.

Adjacent rooms on the same floor of the building and connected by permanent openings in the walls and/or doors between rooms (including gaps between the wall and the floor), can be considered part of the same room if the openings meet the following criteria.

- The opening is permanent and cannot be closed.
- Openings extending to the floor, such as door gaps, need to be at least 20 mm above the floor covering surface.
- Natural ventilations opening areas must meet the requirements of ANSI\ASHRAE Standard 15-2022, Section 7.2.3.2.

Rooms that are connected by a mechanical ventilation system can be considered a single room area if the mechanical ventilation system meets the requirements of ANSI\ASHRAE Standard 15-2022, Section 7.6.4.

## Leak Detection System (Refrigerant charge greater than 3.91 lb per circuit)

The leak detection system consists of one or more refrigerant detection sensors. When the system detects a leak, the following mitigation actions will be initiated until refrigerant has not been detected for at least 5 minutes:

- Energize the supply fan(s) to deliver a required minimum amount of circulation airflow.
- Disable compressor operation.
- Provide an output signal to fully open all zoning dampers, such as VAV boxes.
- Provide an output to energize additional mechanical ventilation (if needed).
- Units without airflow proving will disable electric heat sources.

Building fire and smoke systems may override this function.

If the refrigerant sensor has a fault, is at the end of its life, or is disconnected, the unit will initiate the mitigation actions. Mitigation actions may be verified by disconnecting the sensor.

The refrigerant sensors do not need service. Use only manufacturer-approved sensors when replacement is required.

AIRE Y CLIMA ESPECIALIZADO

# Installation

## Unit Foundation

**⚠ WARNING**

**Risk of Roof Collapsing!**

**Failure to ensure proper structural roof support could cause the roof to collapse, which could result in death or serious injury and property damage.**

**Confirm with a structural engineer that the roof structure is strong enough to support the combined weight of the roofcurb, the unit, and any accessories.**

**⚠ CAUTION**

**Water Damage!**

**Flexible hose can burst.**

**Flexible hose should never be used for an indoor installation. Failure to follow this recommendation could lead to equipment or property-only-damage.**

***Notes:***

- *For units with optional Condensate Overflow Switch (COF) accessory kit, the switch will not work properly if unit is not level or slightly sloped toward switch.*
- *To assure proper condensate flow during operation the unit and the curb must be level.*

If the unit is installed at ground level, elevate it above the snow line. Provide concrete footings at each support location with a **full perimeter** support structure or a slab foundation for support. Refer to for the unit's operating and point loading weights when constructing a footing foundation.

If anchoring is required, anchor the unit to the slab using hold down bolts or isolators. Isolators should be installed to minimize the transmission of vibrations into the building.

For rooftop applications, if anchoring is required, anchor the unit to the roof with hold-down bolts or isolators.

Check with a roofing contractor for proper waterproofing procedures.

### Ductwork

Elbows with turning vanes or splitters are recommended to minimize air noise due to turbulence and to reduce static pressure.

When attaching the ductwork to the unit, provide a watertight flexible connector at the unit to prevent operating sounds from transmitting through the ductwork.

All outdoor ductwork between the unit and the structure should be weather proofed after installation is completed.

***Note:*** *For sound consideration, cut only the holes in the roof deck for the ductwork penetrations. Do not cut out the entire roof deck within the curb perimeter.*

If a Curb Accessory Kit is not used:

1. The ductwork can be attached directly to the factory-provided flanges around the unit's supply and return air openings. Be sure to use flexible duct connections at the unit.
2. For **built-up** curbs supplied by others, gaskets must be installed around the curb perimeter flange and the supply and return air opening flanges.

## General Unit Requirements

**⚠ WARNING**

**Proper Field Wiring and Grounding Required!**

**Failure to follow code could result in death or serious injury.**

**All field wiring MUST be performed by qualified personnel. Improperly installed and grounded field wiring poses FIRE and ELECTROCUTION hazards. To avoid these hazards, you MUST follow requirements for field wiring installation and grounding as described in NEC and your local/state/national electrical codes.**

The checklist listed below is a summary of the steps required to successfully install a commercial unit. This checklist is intended to acquaint the installing personnel with what is required in the installation process. It does not replace the detailed instructions called out in the applicable sections of this manual.

- ☐ Check the unit for shipping damage and material shortage; file a freight claim and notify appropriate sales representative.
- ☐ Verify correct model, options and voltage from nameplate.
- ☐ Verify that the installation location of the unit will provide the required clearance for proper operation.
- ☐ Assemble and install the roof curb (if applicable). Refer to the latest edition of the curb installers guide that ships with each curb kit.
- ☐ Fabricate and install ductwork; secure ductwork to curb.
- ☐ Rigging the unit.
- ☐ Set the unit onto the curb; check for levelness.
- ☐ Confirm unit-to-curb seal is tight and without buckles or cracks.
- ☐ Install and connect a condensate drain line to the evaporator drain connection.

## Factory Installed Economizer

- Confirm the economizer is pulled out into the operating position. Refer to the standard or low leak economizer Installation Instructions for proper position and setup.
- Install all access panels.

### Controller Wiring Schematic - LLE

For additional information, see *0 to 100% Low Leak Economizer — Downflow - Foundation™ Packaged Cooling and Gas/Electric 3 to 5 Tons - Installation Instructions* (ACC-SVN203*-EN) and *0 to 100% Low Leak Economizer — Horizontal - Foundation™ Packaged Cooling and Gas/Electric 3 to 5 Tons - Installation Instructions* (ACC-SVN205*-EN).

## Main Electrical Power Requirements

☐ Verify that the power supply complies with the unit nameplate specifications.

☐ Inspect all control panel components; tighten any loose connections.

☐ Connect properly sized and protected power supply wiring to a field-supplied/ installed disconnect switch and to the main power terminal block (HTB1) in the unit control panel.

☐ Install proper grounding wires to an earth ground.

***Note:*** *All field-installed wiring must comply with NEC and applicable local codes.*

## Electric Heat Requirements

- Verify that the power supply complies with the electric heater specifications on the unit and heater nameplate.
- Inspect the heater junction box and control panel; tighten any loose connections.
- Check electric heat circuits for continuity.
- Verify low voltage wiring (AC and DC) requirements.
- Install the zone thermostat, with or without switching subbase.
- Connect properly sized control wiring to the proper termination points between the zone thermostat and the unit control panel.

## Condensate Drain Configuration

An evaporator condensate drain connection is provided on each unit. Refer to the unit overview figure in "Dimensional Data," p. 10 for the appropriate drain location.

***Note:*** *Use 1-inch PVC pipe to connect to the drain pan outlet provided in the unit. This is a slip fit joint (no threads). Do not use PVC glue to connect condensate drain, thread sealing compound or Teflon tape may be used.*

A condensate trap must be installed at the unit due to the drain connection being on the **negative pressure** side of the fan.

A condensate drain line must be connected to the P-Trap. Pitch the drain lines at least 0.5-inch for every 10 feet of horizontal run to assure proper condensate flow. Do not allow the horizontal run to sag causing a possible doubletrap condition which could result in condensate backup due to **air lock**.

## Filter Installation

Each unit ships with 2-inch filters installed. The quantity of filters is determined by unit size. Access to the filters is obtained by removing the filter access panel.

Refer to the unit Service Facts (shipped with each unit) for filter requirements

***Note:*** *Do not operate the unit without filters.*

## Field Installed Power Wiring

An overall dimensional layout for the standard field installed wiring entrance into the unit is illustrated in "Dimensional Data," p. 10. To insure the unit's supply power wiring is properly sized and installed, follow the guidelines outlined below.

***Note:*** *All field installed wiring must conform to NEC guidelines as well as state and Local codes.*

Verify that the power supply available is compatible with the unit's nameplate ratings. The available supply power must be within 10 percent of the rated voltage stamped on the nameplate. Use only copper conductors to connect the power supply to the unit.

**NOTICE**

**Use Copper Conductors Only!**

**Failure to use copper conductors could result in equipment damage as the equipment was not designed or qualified to accept other types of conductors.**

***Note:*** *If the unit is not equipped with an optional factory installed nonfused disconnect switch or circuit breaker, a field supplied disconnect switch must be installed at or near the unit in accordance with the National Electrical Code (NEC latest edition).*

# Main Unit Power

**⚠ WARNING**

**Proper Field Wiring and Grounding Required!**

**Failure to follow code could result in death or serious injury.**

**All field wiring MUST be performed by qualified personnel. Improperly installed and grounded field wiring poses FIRE and ELECTROCUTION hazards. To avoid these hazards, you MUST follow requirements for field wiring installation and grounding as described in NEC and your local/state/national electrical codes.**

## Standard Wiring

The electrical service must be protected from over current and short circuit conditions in accordance with NEC requirements.

Protection devices must be sized according to the electrical data on the nameplate.

- If the unit is not equipped with an optional factory installed nonfused disconnect switch, a field supplied disconnect switch must be installed at or near the unit in accordance with the National Electrical Code (NEC latest edition).
- Location of the applicable electrical service entrance is illustrated in "Dimensional Data," p. 10. Complete the unit's power wiring connections onto either; the main terminal block HTB1 inside the unit control panel, the factory mounted nonfused disconnect switch (UCD), or the electric heat terminal block. Refer to the customer connection diagram that shipped with the unit for specific termination points.
- Provide proper grounding for the unit in accordance with local and national codes.

## Optional TBUE Wiring (Through-the-Base Electrical Option)

- Location of the applicable electrical service is illustrated below. Refer to the customer connection diagram that is shipped with the unit for specific termination points. The termination points, depending on the customer option selected, would be a factory mounted nonfused disconnect switch (see Figure 14, p. 26), the electric heat terminal block (if equipped) or the main terminal block.
- Provide proper grounding for the unit in accordance with local and national codes.

**Figure 12. Through the base electrical option**

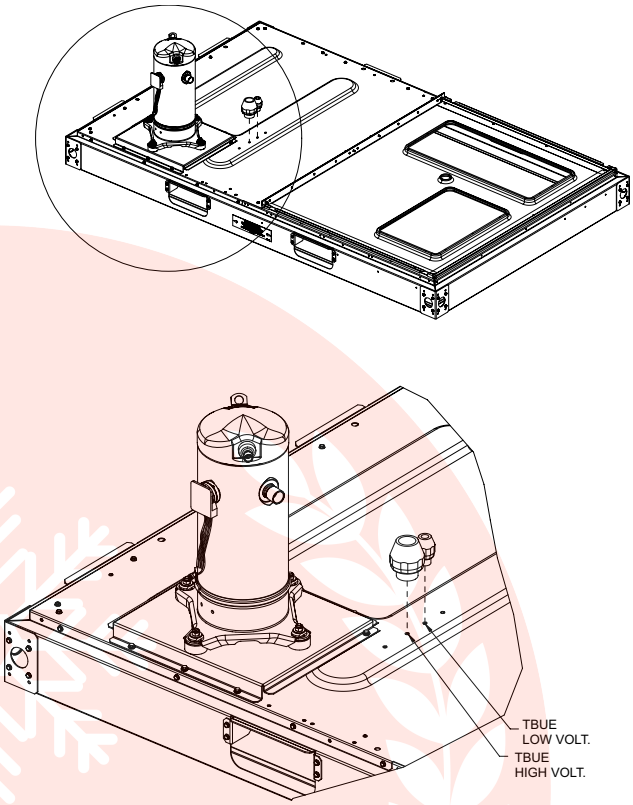


## Control Power Transformer

The 24-volt control power transformers are to be used only with the accessories called out in this manual.

Transformers rated greater than 50 Vac are equipped with internal circuit breakers. If a circuit breaker trips, turn **Off** all power to the unit before attempting to reset it.

The transformer is located in the control panel. The circuit breaker is located on the left side of the transformer and can be reset by pressing in on the black reset button.

## Controls using 24 Vac

Before installing any connecting wiring, refer to "Dimensional Data," p. 10 for the electrical access locations provided on the unit and Table 4, p. 24 for AC conductor sizing guidelines.

**NOTICE**

**Use Copper Conductors Only!**

**Failure to use copper conductors could result in equipment damage as the equipment was not designed or qualified to accept other types of conductors.**

1. Use copper conductors unless otherwise specified.
2. Confirm AC control wiring between the controls and the unit's termination point does not exceed three (3) ohms/conductor for the length of the run.

***Note:*** *Resistance in excess of 3 ohms per conductor could cause component failure due to insufficient AC voltage supply.*

3. Be sure to check all loads and conductors for grounds, shorts, and mis-wiring.
4. Do not run the AC low voltage wiring in the same conduit with the high voltage power wiring.
5. Route low voltage wiring as per Figure 13, p. 24.

**Table 4. Electromechanical thermostat 24 Vac conductors**

| Distance from Unit to Control | Recommended Wire Size |
|---|---|
| 000 to 460 feet | 18 gauge |
| 000 to 140 m | 0.75 mm^2 |
| 461 to 732 feet | 16 gauge |

**Figure 13. Conventional thermostat field wiring diagram**

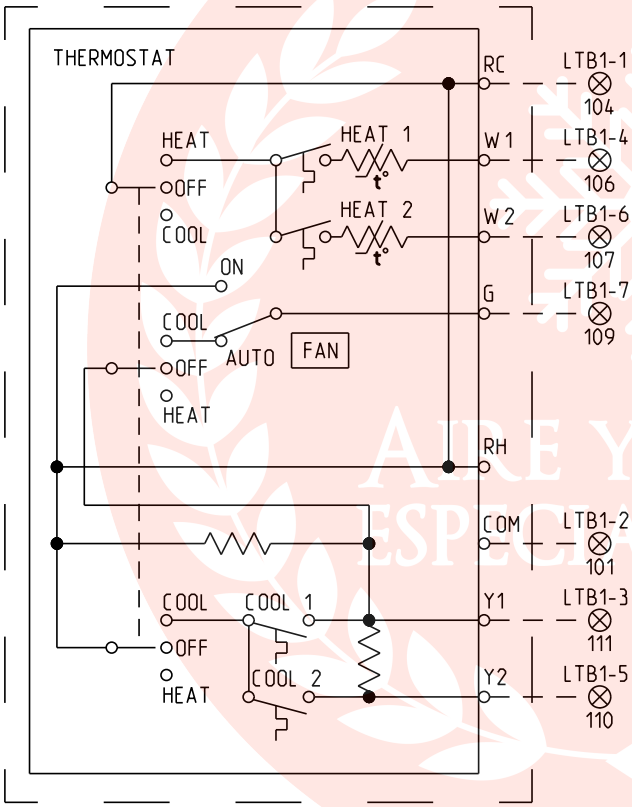


## Voltage Imbalance

Three phase electrical power to the unit must meet stringent requirements for the unit to operate properly. Measure each leg (phase-to-phase) of the power supply.

Each reading must fall within the utilization range stamped on the unit nameplate. If any of the readings do not fall within the proper tolerances, notify the power company to correct this situation before operating the unit.

Excessive three phase voltage imbalance between phases will cause motors to overheat and eventually fail.

The maximum allowable voltage imbalance is 2 percent. Measure and record the voltage between phases 1, 2, and 3 and calculate the amount of imbalance as follows:

% Voltage Imbalance = 100 x (AV - VD) / AV where;

AV (Average Voltage) = Volt1 + Volt2 + Volt3 / 3

- V1, V2, V3 = Line voltage readings
- VD = Line voltage reading that deviates the farthest from the average voltage.

Example: If the voltage readings of the supply power measured 221, 230, and 227, the average volts would be:

(221 + 230 + 227) / 3 = 226 Avg.

- VD (reading farthest from average) = 221
- The percentage of Imbalance equals:
  = 100 x (226 – 221) / 226 = 2.2%

The 2.2 percent imbalance in this example exceeds the maximum allowable imbalance of 2.0 percent. This much imbalance between phases can equal as much as a 20 percent current imbalance with a resulting increase in motor winding temperatures that will decrease motor life.

If the voltage imbalance is over 2 percent, notify the proper agencies to correct the voltage problem before operating this equipment.

## Electrical Phasing (Three Phase Motors)

The compressor motor(s) and the supply fan motor are internally connected for the proper rotation when the incoming power supply is phased as A, B, C.

Proper electrical supply phasing can be quickly determined and corrected before starting the unit by using an instrument like an Associated Research Model 45 Phase Sequence Indicator. Follow the steps below.

**⚠ WARNING**

**Hazardous Voltage!**

**Failure to disconnect power before servicing could result in death or serious injury.**

**Disconnect all electric power, including remote disconnects before servicing. Follow proper lockout/tagout procedures to ensure the power can not be inadvertently energized. Verify that no power is present with a voltmeter.**

1. Turn the field supplied disconnect switch that provides power to the main power terminal block or to the **Line**

side of the optional factory mounted disconnect switch to the **Off** position.

2. Connect the phase sequence indicator leads to the terminal block or to the **Line** side of the optional factory mounted disconnect switch as follows:
   - Black (phase A) to L1
   - Red (phase B) to L2
   - Yellow (phase C) to L3
3. Close the field supplied main power disconnect switch or circuit protector switch that provides the supply power to the unit.

**⚠ WARNING**

**Live Electrical Components!**

**Failure to follow all electrical safety precautions when exposed to live electrical components could result in death or serious injury.**

**When it is necessary to work with live electrical components, have a qualified licensed electrician or other individual who has been properly trained in handling live electrical components perform these tasks.**

4. Observe the ABC and CBA phase indicator lights on the face of the sequencer. The ABC indicator light will glow if the phase is ABC. If the CBA indicator light glows, open the disconnect switch or circuit protection switch and reverse any two power wires.
5. Restore the main electrical power and recheck the phasing. If the phasing is correct, open the disconnect switch or circuit protection switch and remove the phase sequence indicator.

## Compressor Crankcase Heaters

***NOTICE***

**Compressor Failure!**

**Failure to follow instruction below could result in compressor failure.**

**Unit must be powered and crankcase heaters energized at least 8 hours BEFORE compressors are started.**

Each compressor can be equipped with a crankcase heater. The proper operation of the crankcase heater is important to maintain an elevated compressor oil temperature during the **Off** cycle to reduce oil foaming during compressor starts. Oil foaming occurs when refrigerant condenses in the compressor and mixes with the oil. In lower ambient conditions, refrigerant migration to the compressor could increase.

When the compressor starts, the sudden reduction in crankcase pressure causes the liquid refrigerant to boil rapidly causing the oil to foam. This condition could damage compressor bearings due to reduced lubrication and could cause compressor mechanical failures.

Before starting the unit in the **Cooling** mode, set the system switch to the **Off** position and turn the main power disconnect to the **On** position and allow the crankcase heater to operate a minimum of 8 hours.

Before closing the main power disconnect switch, insure that the **System** selection switch is in the **Off** position and the **Fan** selection switch is in the **Auto** position.

Close the main power disconnect switch and the unit mounted disconnect switch, if applicable.

## Checklist

Use the following checklist in conjunction with the general checklist ("General Unit Requirements," p. 21) to confirm the unit is properly installed and ready for operation.

**⚠ WARNING**

**Hazardous Voltage!**

**Failure to disconnect power before servicing could result in death or serious injury.**

**Disconnect all electric power, including remote disconnects before servicing. Follow proper lockout/tagout procedures to ensure the power can not be inadvertently energized. Verify that no power is present with a voltmeter.**

- ☐ Check all electrical connections for tightness and **point of termination** accuracy.
- ☐ Verify that the condenser airflow is unobstructed.
- ☐ Verify that the condenser fan and indoor blower turn freely without rubbing and are properly tightened on the shafts.
- ☐ Check the supply fan belts for proper tension and the fan bearings for sufficient lubrication. If the belts require adjustment, or if the bearings need lubricating, refer to the maintenance section of this manual for instructions.
- ☐ Verify that a condensate trap is installed and the piping is properly sized and pitched.
- ☐ Verify that the correct size and number of filters are in place.
- ☐ Inspect the interior of the unit for tools and debris and install all panels in preparation for starting the unit.

# Factory-Mounted Unit Options

## Unit Disconnect (FIYUDC)

**⚠ WARNING**

**Hazardous Voltage and Equipment Damage!**

**Failure to follow instructions below could result in death or serious injury.**

**CT terminals are referenced to neutral on the meter and may be at elevated voltages. Do not contact meter terminals while the unit is connected. Do not connect or short other circuits to the CT terminals.**

**Disconnect all electric power, including remote disconnects before servicing. Follow proper lockout/tagout procedures to ensure the power can not be inadvertently energized. Verify that no power is present with a CAT III or IV voltmeter rated per NFPA 70E.**

**⚠ WARNING**

**Proper Field Wiring and Grounding Required!**

**Failure to follow code could result in death or serious injury.**

**All field wiring MUST be performed by qualified personnel. Improperly installed and grounded field wiring poses FIRE and ELECTROCUTION hazards. To avoid these hazards, you MUST follow requirements for field wiring installation and grounding as described in NEC and your local/state/national electrical codes.**

***Important:*** *All phases of this installation must comply with NATIONAL, STATE, and LOCAL CODES. In addition to local codes, the installation must comply with National Electric Code - ANSI/NFPA NO. 70 LATEST REVISION.*

1. Field connections are made by first removing the compressor access panel on the front of the unit. Unscrew the assembly around the outside of the disconnect switch. This assembly is located in the condenser section of the unit.

   Both high and low voltage power can be routed through the base or through the front corner post where the disconnect enclosure is mounted. The hole is sized for 1 1/2–in. conduit.

2. If the conduit required for your application is larger than 1 1/2–in., remove the termination plate and connect to the larger hole using field supplied reducing washers.
3. Route the power wires and ground conductor through conduit and into the bottom of the factory installed disconnect switch. Connect the power conductors to the lugs provided. Connect the ground wire to the unit ground lug.

   ***Note:*** *Wire size for the length of run should be determined using the circuit ampacity found on the unit nameplate and the N.E.C.*

4. Route low voltage (class II), control wiring through hole in base of unit but not through high voltage conduit (refer to Figure 12, p. 23 for high and low volt. conduits location). Feed control wiring through bushing provided on side panel. Route wires through loose wire ties provided.
5. Tighten the wire ties. Secure the excess wire bundle under the wire ties in the outdoor section. Do not leave excess wire in the electrical enclosure. Use the unit wiring diagram to make the low voltage connections.

**Figure 14. Field wiring routing - factory installed disconnect switch**

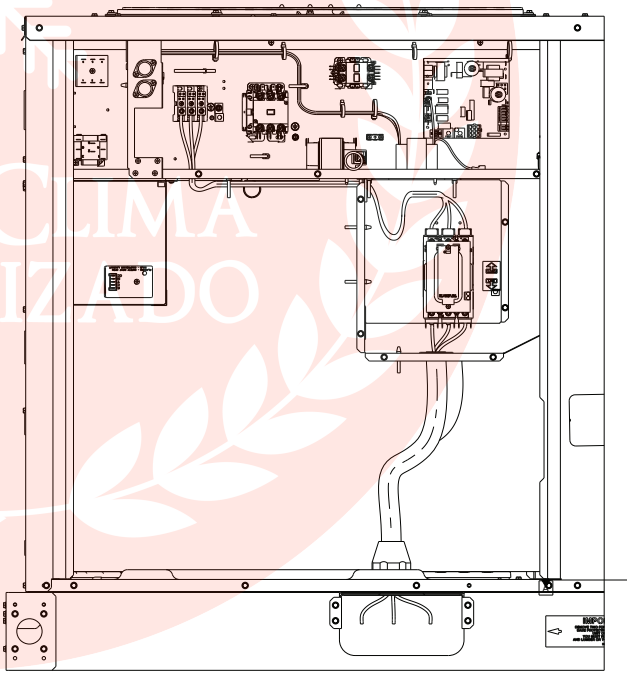

# Pre Start

## Verifying Proper Airflow (Units with Belt Drive Indoor Fan)

Much of the systems performance and reliability is closely associated with, and dependent upon having the proper airflow supplied both to the space that is being conditioned and across the evaporator coil.

The indoor fan speed is changed by opening or closing the adjustable motor sheave.

Before starting the SERVICE TEST, set the minimum position setpoint for the economizer to 0% using the setpoint potentiometer located on the Economizer Control (ECA), if applicable.

## Electromechanical Controls – Test Procedure

See unit schematic for correct wire numbers.

**Fan Test and Minimum Ventilation.** Connect red thermostat wire (R) to black thermostat wire (G).

**Economizer Cooling**. Connect a jumper wire across OAT on Economizer Control (ECA).

Connect red thermostat (R) wire to yellow thermostat wire (Y1).

**Cool 1.** Connect red thermostat wire (R) to yellow thermostat wire (Y1).

**Cool 2.** Connect red thermostat wire (R) to yellow thermostat wire (Y2).

**Heat 1.** Connect red thermostat wire (R) to brown thermostat wire (W1).

**Heat 2.** Connect red thermostat wire (R) to brown thermostat wire (W2).

AIRE Y CLIMA ESPECIALIZADO

# Start-Up

## Standard Economizer Start-Up

1. Set the minimum position setpoint for the economizer to the required percentage of minimum ventilation using the setpoint potentiometer located on the Economizer Control (ECA).

   The economizer will drive to its minimum position setpoint, exhaust fans (if applicable) may start at random, and the supply fan will start when the SERVICE TEST is initiated.

   The Exhaust Fan will start anytime the economizer damper position is equal to or greater than the exhaust fan setpoint.
2. Verify that the dampers stroked to the minimum position.
3. Verify that the dampers stroked to the full open position.
4. To stop the SERVICE TEST, turn the main power disconnect switch to the **Off** position or proceed to the next component start-up procedure. Remove electro mechanical test mode connections (if applicable).

## LLE Controls Test Procedure

See unit schematic for correct wire numbers.

Use the CHECKOUT menu in the Installation Instructions to test the damper operation and any configured outputs. Only items that are configured are shown in the Checkout menu.

To Perform Checkout Tests:

1. Scroll to the desired test in the checkout menu using the △ and ▽ buttons.
2. Press the ⏎ button to select the item.
3. **RUN?** is displayed.
4. Press ⏎ to start the test.
5. The unit pauses and then displays **IN PROGRESS**.
6. When the test is complete, **DONE** appears.
7. When all parameters have been tested, press ⓘ (Menu Up) to end the test (e.g. turn off the relay).

***Notes:***

- *The checkout tests can all be performed at the time of installation or any time during the operation of the system.*
- *JADE will be in **set up** mode for the first 60 minutes after powered. If OA sensor or Sylk Bus device (sensor or actuator) is disconnected during the set up mode, the JADE will not alarm that failure. The MA sensor is a system **critical** sensor, if the MA sensor is removed during the set up mode, the JADE will alarm. After 60 minutes the JADE controller will change to operation mode and all components removed or failed will alarm in the operation mode.*
- *Upon power up (or after a power outage or brownout), the JADE controller module begins a 5 minute power up delay before enabling mechanical cooling.*

## Compressor Start-Up

1. Attach a set of service gauges onto the suction and discharge gauge ports for each circuit. Refer to the refrigerant circuit illustration in the Service Facts.

   Using the Service Test Guide, perform the proper test mode connections.

   Proceed to the next Service Test step if continuing from previous component start-up or until the desired start-up component test is started.

   ***Note:*** *Copeland YA scroll compressors for R-454B units use Trane OIL00094.*

**Table 5. Compressor types**

| Tonnage | Compressor 1 |
|---|---|
| E/GDK036 | YA31K1E |
| E/GDK048 | YA42K1E |
| E/GDK060 | YA51K1E |

**Table 6. POE Oil recharge amount (fl. oz.)**

| Tonnage | Compressor 1 |
|---|---|
| E/GDK036 | 21 |
| E/GDK048 | 36 |
| E/GDK060 | 36 |

2. After the compressor and condenser fan have started and operated for approximately 30 minutes, observe the operating pressures. Compare the operating pressures to the operating pressure curve in the Service Facts.
3. Check system sub-cooling. Follow the instruction listed on the sub-cooling charging curve in the Service Facts.

4. Repeat Step 1 through Step 3 for each refrigerant circuit.
5. To stop the SERVICE TEST, turn the main power disconnect switch to the **Off** position or proceed to the next component start-up procedure. Remove electromechanical test mode connections (if applicable).

## Heating Start-Up

1. Clamp an amp meter around one of 1st stage heater power wires at the heater contactor.
2. Verify that the heater stage is operating properly.
3. Clamp an amp meter around one of 2nd stage heater power wires at the heater contactor (if applicable).
4. Verify that the heater stage is operating properly.
5. To stop the SERVICE TEST, turn the main power disconnect switch to the **Off** position or proceed to the next component start-up procedure. Remove electromechanical test mode connections.

## Final System Set Up

After completing all of the pre-start and startup procedures outlined in the previous sections (i.e., operating the unit in each of its modes through all available stages of cooling and heating), perform these final checks before leaving the unit:

- ☐ Program the Night Setback (NSB) panel (if applicable) for proper unoccupied operation. Refer to the programming instructions for the specific panel.
- ☐ Verify that the Remote panel **System** selection switch, **Fan** selection switch, and **Zone Temperature** settings for automatic operation are correct.
- ☐ Inspect the unit for misplaced tools, hardware, and debris.
- ☐ Verify that all exterior panels including the control panel doors and condenser grilles are secured in place.
- ☐ Close the main disconnect switch or circuit protector switch that provides the supply power to the unit's terminal block or the unit mounted disconnect switch.

AIRE Y CLIMA ESPECIALIZADO

# Maintenance

Make sure all personnel are standing clear of the unit before proceeding. The system components will start when the power is applied.

## Fan Belt Adjustment-Belt Drive Units

**⚠ WARNING**

**Rotating Components!**

**Failure to disconnect power before servicing could result in rotating components cutting and slashing technician which could result in death or serious injury.**
**Disconnect all electric power, including remote disconnects before servicing. Follow proper lockout/tagout procedures to ensure the power can not be inadvertently energized.**

The fan belts must be inspected periodically to assure proper unit operation. Replacement is necessary if the belts appear frayed or worn. Units with dual belts require a matched set of belts to confirm equal belt length.

When removing or installing the new belts, do not stretch them over the sheaves. Loosen the belts using the belt tension adjustment bolts on the motor mounting base.

Once the new belts are installed, using a Browning or Gates tension gauge (or equivalent), adjust the belt tension as follows:

1. To determine the appropriate belt deflection:
   a. Measure the center-to-center shaft distance (in inches) between the fan and motor sheaves.
   b. Divide the distance measured in Step 1a by 64; the resulting value represents the amount of belt deflection that corresponds to the proper belt tension.
2. Set the large O-ring on the belt tension gauge at the deflection value determined in Step 1b.
3. Set the small O-ring at zero on the force scale of the gauge plunger.
4. Place the large end of the gauge at the center of the belt span; then depress the gauge plunger until the large O-ring is even with the top of the next belt or even with a straightedge placed across the fan and motor sheaves.
5. Remove the belt tension gauge. The small O-ring now indicates a number other than zero on the plunger force scale. This number represents the force (in pounds) required to give the needed deflection.
6. Compare the **force** scale reading (Step 5) with the appropriate **force** value listed in the Belt tension table. If the **force** reading is outside the range, readjust the belt tension.

   ***Note:*** *Actual belt deflection **force** must not exceed the maximum **force** value shown in the Belt tension measurement and deflection ranges table.*
7. Recheck the belt tension at least twice during the first 2 to 3 days of operation. Belt tension may decrease until the new belts are **run in**.

**Figure 15. Belt tension gauge**

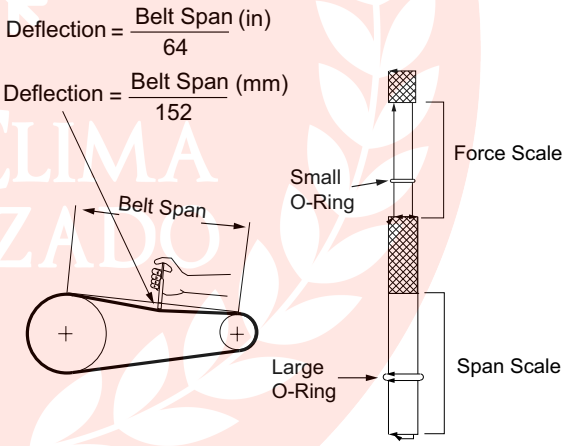


**Table 7. Belt tension measurement and deflection ranges (in./lb.)**

| Belts Cross Section | Smallest Sheave Diameter Range (in.) | RPM Range | Deflection Force (lb) | | | |
|---|---|---|---|---|---|---|
| | | | Super Grip belts and Unnotched Grip bands | | Grip notch Belts and Notched Grip bands | |
| | | | Used Belt | New Belt | Used Belt | New Belt |
| A, AX | 3.0 to 3.6 | 1000 to 2500 | 3.7 | 5.5 | 4.1 | 6.1 |
| | | 2501 to 4000 | 2.8 | 4.2 | 3.4 | 5.0 |
| | 3.8 to 4.8 | 1000 to 2500 | 4.5 | 6.8 | 5.0 | 7.4 |
| | | 2501 to 4000 | 3.8 | 5.7 | 4.3 | 6.4 |
| | 5.0 to 7.0 | 1000 to 2500 | 5.4 | 8.0 | 5.7 | 8.4 |
| | | 2501 to 4000 | 4.7 | 7.0 | 5.1 | 7.6 |

## Monthly Maintenance

Before completing the following checks, turn the unit OFF and lock the main power disconnect switch open.

**⚠ WARNING**

**Hazardous Voltage!**

**Failure to disconnect power before servicing could result in death or serious injury.**

**Disconnect all electric power, including remote disconnects before servicing. Follow proper lockout/tagout procedures to ensure the power can not be inadvertently energized. Verify that no power is present with a voltmeter.**

## Filters

Inspect the return air filters. Clean or replace them if necessary. Refer to the unit Service Facts for filter information.

## Condensate Overflow Switch

During maintenance, the switch float (black ring) must be checked to confirm free movement up and down.

## Cooling Season

- ☐ Check the unit's drain pans and condensate piping to confirm there are no blockages.
- ☐ Inspect the evaporator and condenser coils for dirt, bent fins, etc. If the coils appear dirty, clean them according to the instructions described in "Coil Cleaning," p. 32.
- ☐ Manually rotate the condenser fans to confirm free movement and check motor bearings for wear. Verify that all of the fan-mounting hardware is tight.
- ☐ Inspect the F/A-R/A damper hinges and pins to confirm all moving parts are securely mounted. Keep the blades clean as necessary.

**⚠ WARNING**

**Rotating Components!**

**Failure to disconnect power before servicing could result in rotating components cutting and slashing technician which could result in death or serious injury.**

**During installation, testing, servicing and troubleshooting of this product it may be necessary to work with live and exposed rotating components. Have a qualified or licensed service individual who has been properly trained in handling exposed rotating components, perform these tasks.**

***NOTICE***

**Equipment Damage!**

**Forcibly turning the motor shaft can damage the gear train and motor beyond repair.**

**Never turn the motor shaft by hand or with a wrench.**

- ☐ Verify that all damper linkages move freely; lubricate with white grease, if necessary.
- ☐ Check supply fan motor bearings; repair or replace the motor as necessary.
- ☐ Check the fan shaft bearings for wear. Replace the bearings as necessary.
- ☐ Check the supply fan belt(s). If the belts are frayed or worn, replace them. Refer to the "Fan Belt Adjustment-Belt Drive Units," p. 30 for belt replacement and adjustments.
- ☐ Verify that all wire terminal connections are tight.
- ☐ Remove any corrosion present on the exterior surfaces of the unit and repaint these areas.
- ☐ Generally inspect the unit for unusual conditions (e. g. loose access panels, leaking piping connections, etc.)
- ☐ Make sure that all retaining screws are reinstalled in the unit access panels once these checks are complete.
- ☐ With the unit running, check and record the following:
  - Ambient temperature
  - Compressor oil level (each circuit)
  - Compressor suction and discharge pressures (each circuit)
  - Superheat and subcooling (each circuit)

Record this data on an **operators maintenance log** like the one shown in Table 9, p. 33 in "Final Process," p. 32. If the operating pressures indicate a refrigerant shortage, measure the system superheat and system subcooling. For guidelines, refer to "Compressor Start-Up," p. 28.

***Important:*** *Do not release refrigerant to the atmosphere! If adding or removing refrigerant is required, the service technician must comply with all federal, state and local laws. Refer to General Service Bulletin (MSCU-SB-1) (latest edition).*

## Heating Season

- ☐ Inspect the unit's air filters. If necessary, clean or replace them.
- ☐ Check supply fan motor bearings; repair or replace the motor as necessary.
- ☐ Inspect both the main unit control panel and heat section control box for loose electrical components and terminal connections, as well as damaged wire insulation. Make any necessary repairs.
- ☐ Verify that the electric heat system operates properly.

## Coil Cleaning

Regular coil maintenance, including annual cleaning enhances the unit's operating efficiency by minimizing the following:

- Compressor head pressure and amperage draw
- Evaporator water carryover
- Fan brake horsepower
- Static pressure losses
- Airflow reduction

At least once each year, or more often if the unit is located in a **dirty** environment, clean the condenser coils using the instructions outlined below. Be sure to follow these instructions as closely as possible to avoid damaging the coils.

**⚠ WARNING**

**Hazardous Chemicals!**

**Failure to follow this safety precaution could result in death or serious injury. Coil cleaning agents can be either acidic or highly alkaline and can burn severely if contact with skin or eyes occurs.**
**Handle chemical carefully and avoid contact with skin. ALWAYS wear Personal Protective Equipment (PPE) including goggles or face shield, chemical resistant gloves, boots, apron or suit as required. For personal safety refer to the cleaning agent manufacturer's Materials Safety Data Sheet and follow all recommended safe handling practices.**

## Microchannel (MCHE) Coils

***NOTICE***

**Coil Damage!**

**Failure to follow instructions below could result in coil damage.**
**DO NOT use any detergents with microchannel condenser coils.**
**Use pressurized water or air ONLY, with pressure no greater than 600psi.**
***For additional information regarding the proper microchannel coil cleaning procedure, refer to RT-SVB83*-EN***

Due to the soft material and thin walls of the MCHE coils, the traditional field maintenance method recommended for Round Tube Plate Fin (RTPF) coils does not apply to microchannel coils. Moreover, chemical cleaners are a risk factor to MCHE due to the material of the coil. The manufacturer does not recommend the use of chemical cleaners to clean microchannel coils. Using chemical cleaners could lead to warranty claims being further evaluated for validity and failure analysis.

The recommended cleaning method for microchannel condenser coils is pressurized water or air with a nonpinpoint nozzle and an ECU of at least 180 with pressure no greater than 600 psi. To minimize the risk of coil damage, approach the cleaning of the coil with the pressure washer aimed perpendicular to the face of the coil during cleaning. Optimum clearance between the sprayer nozzle and the microchannel coil is 1-inch to 3-inch.

## Final Process

For future reference, record the unit data below in the blanks provided.

**Table 8. Unit data log**

| | |
|---|---|
| **Complete Unit Model Number** | |
| **Unit Serial Number** | |
| **Wiring Diagram Numbers (from unit control panel)** | |
| **-schematic(s)** | |
| | |
| | |
| **-connections** | |
| | |
| **Network ID** | |

AIRE Y CLIMA ESPECIALIZADO

**Table 9. Sample maintenance log**

| Date | Current Ambient Temp F/C | Refrigerant Circuit #1 | | | | | |
|---|---|---|---|---|---|---|---|
| | | Compr. Oil Level | Suct. Press. Psig/kPa | Disch. Press. Psig/kPa | Liquid Press. Psig/kPa | Superheat F/C | Sub-cool F/C |
| | | - ok<br>- low | | | | | |
| | | - ok<br>- low | | | | | |
| | | - ok<br>- low | | | | | |
| | | - ok<br>- low | | | | | |
| | | - ok<br>- low | | | | | |
| | | - ok<br>- low | | | | | |
| | | - ok<br>- low | | | | | |
| | | - ok<br>- low | | | | | |
| | | - ok<br>- low | | | | | |
| | | - ok<br>- low | | | | | |
| | | - ok<br>- low | | | | | |
| | | - ok<br>- low | | | | | |
| | | - ok<br>- low | | | | | |
| | | - ok<br>- low | | | | | |

AIRE Y CLIMA
ESPECIALIZADO

# Troubleshooting

**⚠ WARNING**

**Hazardous Service Procedures!**

**Failure to follow all precautions in this manual and on the tags, stickers, and labels could result in death or serious injury.**

**Technicians, in order to protect themselves from potential electrical, mechanical, and chemical hazards, MUST follow precautions in this manual and on the tags, stickers, and labels, as well as the following instructions: Unless specified otherwise, disconnect all electrical power including remote disconnect and discharge all energy storing devices such as capacitors before servicing. Follow proper lockout/tagout procedures to ensure the power can not be inadvertently energized. When necessary to work with live electrical components, have a qualified licensed electrician or other individual who has been trained in handling live electrical components perform these tasks.**

## Standard Troubleshooting

### Failures

#### Cooling Failure

1. Cooling and heating set points (slide pot) on the thermostat have failed.

   ***Note:*** *Not used on electromechanical units.*

2. CC1 24 Vac control circuit has opened. Check CC1 coils and Frostat™ status. Check the status of the LED indicator in LSD:

   a. LED will be flashing to indicate that a Safety Input has opened while a Y call is present.

   b. Compressor lockout is indicated by a solid (nonflashing) red LED.

   To reset LSD - Power cycle on **R** input.

#### Simultaneous Heat and Cool Failure

Emergency Stop is activated.

### Low Leak Economizer – (LLE) Troubleshooting

1. The economizer controller provides alarm messages that display on the 2-line LCD. If one or more alarms are present and there has been no keypad activity for at least 5 minutes, the Alarms menu displays and cycles through the active alarms.

   ***Note:*** *You can also navigate to the Alarms menu at any time.*

2. Once the alarm has been identified and the cause has been removed (for example, replaced faulty sensor), the alarm can be cleared from the display.

   ***Note:*** *If an alarm still exists after you clear it, it re-displays within 5 seconds.*

#### To Clear an Alarm

Once the alarm has been identified and the cause has been removed (for example, replaced faulty sensor), the alarm can be cleared from the display.

1. Navigate to the desired alarm.
2. Press ⏎.
3. **ERASE?** is displayed.
4. Press ⏎.
5. **ALARM ERASED** is displayed.
6. Press ⓣ (Menu Up) to complete the action and return to the previous menu.

   ***Note:*** *If an alarm still exists after you clear it, it re-displays within 5 seconds.*

#### Low Leak Economizer Fault Codes

Low Leak Economizer Alarms:

- $CO_2$ Sensor Error
- SYS Alarm
- Actuator Undervoltage
- Actuator Overvoltage
- Actuator Stalled

The FDD system detects the following faults:

- Air temperature sensor failure/fault
- Not economizing when it should
- Economizing when it should not
- Damper not modulating
- Excess outdoor air

The JADE controller is a certified FDD product (HJW10) by California Title 24, Part 6. The FDD system is required for meeting California Energy Commission's Title 24 regulations. Table 10, p. 35 shows the various tests that can be performed (rows) and the five faults that are defined by FDD (columns). The **x** means that the test has to be conducted to see if it is causing the fault to occur.

AIRE Y CLIMA ESPECIALIZADO

**Table 10. FDD troubleshooting**

| | Faults | | | | |
|---|---|---|---|---|---|
| **Tests** | **Air temp. sensor failure/fault** | **Not economizing when it should** | **Economizing when it should not** | **Damper not modulating** | **Excess outdoor air** |
| Damper Stuck Open | | | x | x | x |
| Damper Stuck at Minimum | | x | | x | |
| Bad or Unplugged Actuator | | x | x | x | |
| Sensor Hard Failure | x | x | x | | x |
| Actuator Mechanically Disconnected | | x | x | x | x |

# Resetting Cooling and Heating Lockouts

Cooling Failures and Heating Lockouts are reset in an identical manner.

"Method 1," p. 35 section explains resetting the system from the space; "Method 2," p. 35 section explains resetting the system at the unit.

***Note:*** *Before resetting Cooling Failures and Heating Lockouts check the Failure Status Diagnostics by the methods previously explained. Diagnostics will be lost when the power to the unit is disconnected.*

## Method 1

To reset the system from the space, turn the **Mode** selection switch at the thermostat to the **Off** position. After approximately 30 seconds, turn the **Mode** selection switch to the desired mode, i.e. Heat, Cool or Auto.

## Method 2

To reset the system at the unit, cycle the unit power by turning the disconnect switch **Off** and then **On**.

## Condensate Overflow Switch

When the condensate overflow switch is closed, a drain pan overflow condition is indicated and it will shut unit operations down.

## Fan Failure Switch

- In electric heat mode, the fan failure switch is connected in series with the electric heat relay. There is a set point of 0.07 +/- 0.05-inch w.c.
- If the fan failure switch is open, indicating a no airflow condition, it prevents the electric heat from being activated or shuts down if already running.
- This safety feature allows the electric heat system to function effectively only when there is proper airflow.

# Unit Economizer Control (ECA)

Verify Economizer Status by Economizer Actuator (ECA) LED indicator:

- OFF: No Power or Failure
- ON: Normal, OK to Economize
- Slow Flash: Normal, Not OK to Economize
- Fast Flash - 1/4 Second On/2 Seconds Off:
  - Error Code: Communications Failure
- Pulse Flash: 1/30 Second On / 1/4 Second Off: (2 Seconds between pulse sequences)

## Error Code

- 1 Flash: Actuator Fault
- 2 Flashes: $CO_2$ Sensor
- 3 Flashes: RA Humidity Sensor
- 4 Flashes: RA Temp Sensor
- 6 Flashes: OA Humidity Sensor
- 7 Flashes: OA Temp Sensor
- 8 Flashes: MA Temp Sensor
- 9 Flashes: On-board Setpoint Failure

# Wiring Diagrams

***Note:*** *Wiring diagrams can be accessed via e-Library by entering the diagram number in the literature order number search field or by contacting technical support.*

**Table 11. Wiring diagrams**

| Type of Airflow | Schematic Type | Voltage | Diagram Number | Description |
|---|---|---|---|---|
| Constant Volume | Power | 208–575 | 12134757 | Cooling only or Electric Heat |
| | Control | 208–575 | 12134762 | Cooling only or Electric Heat |
| | Electric Heat Diagram | 208–575 | 12131531 | Electric Heat-208/575- 5-15 kW |
| | | 208–230 | 12131532 | Electric Heat-208/230-20-25 kW |
| | | 460/575 | 12131533 | Electric Heat-460/575-20-25 kW |
| | Component Location | 208-575 | 12134785 | Cooling only or Electric Heat |

AIRE Y CLIMA
ESPECIALIZADO

# Warranty

## For Commercial Unitary Equipment Rated 25 Tons and Under and Related Accessories

**Products Covered** — This warranty is extended by Trane, and applies to the following products:

- All packaged and split system air conditioners and heat pumps have a rated capacity of 25 tons and under.
- All packaged combinations gas/electric air conditioners having a rated capacity of 25 tons and under.
- All packaged combination gas/electric air conditioners having a rated capacity of 1.5 through 5 tons single phase electric power and used for commercial applications. (As used in this warranty, a commercial application is any application where the end purchaser uses the product for other than personal, family or household purposes).
- All accessories for the above products which are sold by Trane and applied in accordance with Trane specifications.

## Basic Warranty

The warrantor warrants for a period of twelve (12) months from the initial start-up or eighteen (18) months from date of shipment, whichever is sooner, that the products covered by this warranty (1) are free from defects in material and manufacture, and (2) have the capacities and ratings set forth in the warrantor's catalogs and bulletins. If any part of your air conditioner fails because of a manufacturing defect, Warrantor will furnish without charge the required replacement part.

If the heat exchanger fails because of a manufacturing defect within five years from the date of start-up, Warrantor will furnish without charge a replacement heat exchanger. In addition, if the optional, factory installed, stainless steel heat exchanger fails because of a manufacturing defect within ten years from the date of start-up, Warrantor will furnish without charge a replacement heat exchanger.

Any local transportation, related service labor and diagnosis calls are not included. In addition, if the sealed motor-compressor fails because of a manufacturing defect within the second through fifth year from the date of original purchase, Warrantor will furnish without charge the required replacement compressor.

## Exclusions and Limitations

The warrantor's obligations and liabilities under this warranty are limited to furnishing F.O.B. factory or warehouse at the warrantor-designated shipping point, freight allowed to Buyer's city (or port of export for shipments outside the conterminous United States) a replacement product or, at the option of the warrantor, parts for the repair of the product not conforming to this warranty and which have been returned to the warrantor.

The warrantor's warranty is conditional on the Customer providing written notice to the warrantor within thirty (30) days of the discovery of the defect. No product shall be returned to the warrantor without the warrantor's written permission. No liability whatever shall attach to warrantor until said products have been fully paid for and then said liability shall be limited to the purchase price of the equipment shown to be defective.

The warranty does not apply to any compressor or gas-fired heat exchanger which has been repaired or altered in such manner as, in the judgement of the warrantor, affects its stability or reliability. This warranty does not cover (1) any heat exchanger which has been fired with an improper type of fuel (2) a heat exchanger which is installed in a beauty parlor, dry cleaning establishment, de-greasing plant or in any corrosive atmosphere; or (3) any heat exchanger which is not shown to be defective by the warrantor's inspection.

This warranty does not cover damage due to accident, abuse, improper use, external causes, freezing, corrosion, erosion or deterioration. Local transportation, related service labor, air filters, diagnosis calls, refrigerant and related items are not covered.

THE WARRANTY AND LIABILITY SET FORTH HEREIN ARE IN LIEU OF ALL OTHER WARRANTIES AND LIABILITIES, WHETHER IN CONTRACT OR IN NEGLIGENCE, EXPRESS OR IMPLIED, IN LAW OR IN FACT, INCLUDING IMPLIED WARRANTIES OR MERCHANTABILITY AND FITNESS FOR A PARTICULAR PURPOSE AND ANY IMPLIED WARRANTIES OTHERWISE ARISING FROM THE COURSE OF DEALING OR TRADE. IN NO EVENT SHALL THE WARRANTOR BE LIABLE FOR ANY INCIDENTAL OR CONSEQUENTIAL DAMAGES.

The warrantor makes certain further warranty protection available on an optional, extra-cost basis. Any further warranty must be in writing. If you wish further help or information concerning this warranty, contact: Trane — Warrantor, 2701 Wilma Rudolph Blvd., Clarksville, TN 37040

AIRE Y CLIMA
ESPECIALIZADO

AIRE Y CLIMA
ESPECIALIZADO

AIRE Y CLIMA
ESPECIALIZADO

Trane and American Standard create comfortable, energy efficient indoor environments for commercial and residential applications. For more information, please visit trane.com or americanstandardair.com.

Trane and American Standard have a policy of continuous product and product data improvement and reserve the right to change design and specifications without notice. We are committed to using environmentally conscious print practices.

RT-SVX078B-EN 23 Aug 2024
Supersedes RT-SVX078A-EN (July 2024)

©2024