Quick Reference Guide

# Foundation™

## 3 to 5 Tons Packaged Rooftop Units Cooling and Gas/Electric

| Model Number: | Used With: |
|---|---|
| EDK | Packaged Cooling, Electric Heat (Optional) |
| GDK | Packaged Cooling, Gas Heat |

August 2024

**RT-PRC114B-EN**

©2024

1

## Copyright

This document and the information in it are the property of Trane, and may not be used or reproduced in whole or in part without written permission. Trane reserves the right to revise this publication at any time, and to make changes to its content without obligation to notify any person of such revision or change.

## Trademarks

All trademarks referenced in this document are the trademarks of their respective owners.

## List of Options

***Note:*** *Most factory installed options are available for downflow air discharge units only. Verify with ordering system for availability.*

**Table 1. List of options**

| Factory Installed Options | Field Installed Options |
|---|---|
| Barometric Relief[a] (Downflow Low Leak Economizer Only) | Barometric Relief (Standard and Low Leak Economizer, Downflow and Horizontal Configuration) |
| Complete Coat™ Microchannel Condenser Coil | Crankcase Heater |
| Condensate Overflow Switch | Demand Control Ventilation with $CO_2$ Sensor |
| Economizer (Downflow)[a] | Economizer (Horizontal) |
| Electric Heaters | Frostat™ |
| Low Leak Economizer - Downflow | Low Ambient Kit |
| Manual Outside Air Dampers | Low Leak Economizer - Horizontal |
| Motorized Outside Air Dampers | LP Conversion Kit |
| MERV-13 Filters | Powered Exhaust |
| Oversized Motor | Remote Potentiometer |
| Reference or Comparative Enthalpy Economizer | Roof Curb |
| Stainless Steel Heat Exchanger with 10 Year Warranty | Thermostat |

2

**Table 1. List of options (continued)**

| Factory Installed Options | Field Installed Options |
|---|---|
| Through-the-Base Electrical Access | Tool-less Hail Guard |
| Through-the-Base Gas Piping | |
| Unit Mounted Non-Fused Disconnect Switch[b] | |

(a) Some field set up required.
(b) Must be ordered with Through-the-Base Electrical option.

**Table 2. 3 to 5 tons packaged rooftop performance data (gas or electric heat)**

| Nominal Size (Ton) | 3 | 4 | 5 |
|---|---|---|---|
| **Cooling Performance[a]** | | | |
| Gross Cooling Capacity | 38,000 | 51,300 | 59,500 |
| AHRI Net Cooling Capacity | 36,600 | 49,500 | 57,500 |
| Nominal Airflow CFM/AHRI Rated CFM | 1200/1050 | 1600/1400 | 2000/1600 |
| EER[b]/EER2[c] | 12.0/10.6 | 12.0/10.6 | 12.0/10.6 |
| SEER[b]/SEER2)[c] | 14.0/13.4 | 14.0/13.4 | 14.0/13.4 |
| **Gas Heating Performance** | | | |
| Low Heat (Input/Output) - (Btu/h) | 72,000/57,600 | 72,000/57,600 | 72,000/57,600 |
| Medium Heat (Input/Output) - (Btu/h) | 100,000/80,000 | 115,000/ 92,000 | 115,000/ 92,000 |
| **Other Information** | | | |
| Net Weight (lbs) - Gas Heat | 524 | 566 | 586 |
| Net Weight (lbs) - Electric Heat | 473 | 516 | 536 |
| Filters - Type Furnished | Throwaway | Throwaway | Throwaway |
| Number and Size Recommended | (4) 16×16×2 | (4) 16×16×2 | (4) 16×16×2 |

(a) Cooling Performance is rated at 95°F ambient, 80°F entering dry bulb, 67°F entering wet bulb.
(b) EER and SEER are rated at AHRI conditions and calculated in accordance with AHRI Standard 210/240-2017. Airflow and net cooling capacity not shown.
(c) EER2 and SEER2 are rated at AHRI conditions and certified in accordance with AHRI Standard 210/240-2023.

3

**Table 3. Unit MCA and MOP electrical data (standard indoor fan motor - cooling or gas heat)**

| Tons | Unit Operating Voltage Range | Standard Indoor Fan Motor | |
|---|---|---|---|
| | | Minimum Circuit Ampacity[a] | Maximum Fuse Size or Maximum Circuit Breaker |
| 3 | 208-230 | 23 | 30 |
| | 460 | 11 | 15 |
| | 575 | 9 | 15 |
| 4 | 208-230 | 23 | 35 |
| | 460 | 11 | 15 |
| | 575 | 10 | 15 |
| 5 | 208-230 | 28 | 40 |
| | 460 | 13 | 15 |
| | 575 | 11 | 15 |

(a) Values do not include Power Exhaust accessory.

**Table 4. Unit indoor fan data**

| E/GDK | Volts | Standard (HP - RPM) | Oversized (HP - RPM) |
|---|---|---|---|
| **036** | 208-230 | 1 - 1725 | 2 - 1725 |
| | 460 | | |
| | 575 | | |
| **048** | 208-230 | 1 - 1725 | 2 - 1725 |
| | 460 | | |
| | 575 | | |
| **060** | 208-230 | 1 - 1725 | 2 - 1725 |
| | 460 | | |
| | 575 | | |

4

**Table 5. Unit dimensional data**

| | 3 to 5 Tons |
|---|---|
| **Unit Length UL** | 76.814 in. |
| **Unit Width UW** | 47.934 in. |
| **Unit Height UH** | 42.004 in. |
| **Curb Length CL** | 70.871 in. |
| **Curb Width CW** | 41.983 in. |
| **Supply Length SL[a]** | 21.060 in. |
| **Supply Width SW[a]** | 14.000 in. |
| **Return Length RL[a]** | 32.188 in. |
| **Return Width RW[a]** | 14.430 in. |

(a) Dimensions are for curb openings and not duct inserts. Reference the product catalog for duct insert dimensions.

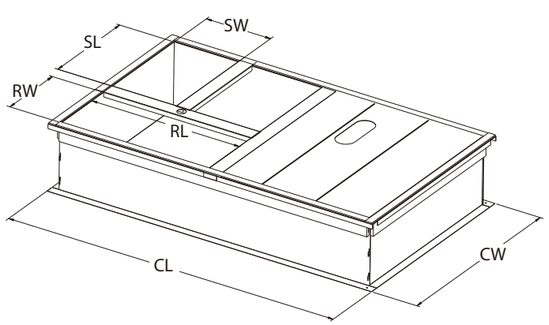


5

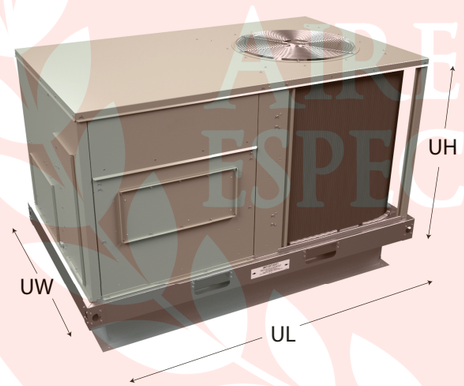


Trane and American Standard create comfortable, energy efficient indoor environments for commercial and residential applications. For more information, please visit trane.com or americanstandardair.com.

Trane and American Standard have a policy of continuous product and product data improvement and reserve the right to change design and specifications without notice. We are committed to using environmentally conscious print practices.

RT-PRC114B-EN 23 Aug 2024
Supersedes RT-PRC114A-EN (Jul 2024)

©2024

AIRE Y CLIMA ESPECIALIZADO