Service Facts

Single Packaged, Two Stage, Heat Pump

5WCZ5048A1000A

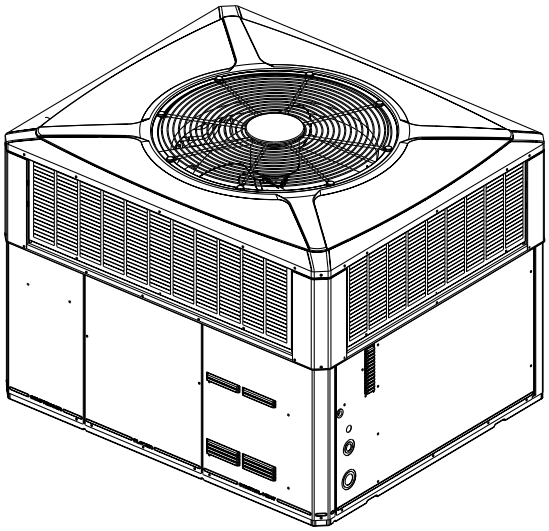

Note: *"Graphics in this document are for representation only. Actual model may differ in appearance."*

⚠ SAFETY WARNING

Only qualified personnel should install and service the equipment. The installation, starting up, and servicing of heating, ventilating, and air-conditioning equipment can be hazardous and requires specific knowledge and training. Improperly installed, adjusted or altered equipment by an unqualified person could result in death or serious injury. When working on the equipment, observe all precautions in the literature and on the tags, stickers, and labels that are attached to the equipment.

October 2024

5WCZ5048A-SF-1A-EN

SAFETY SECTION

Important: *This document contains a wiring diagram, a parts list, and service information. This is customer property and is to remain with this unit. Please return to service information pack upon completion of work.*

⚠ WARNING

HAZARDOUS VOLTAGE!

Failure to follow this Warning could result in property damage, severe personal injury, or death.

Disconnect all electric power, including remote disconnects before servicing. Follow proper lockout/tagout procedures to ensure the power cannot be inadvertently energized.

⚠ WARNING

SAFETY AND ELECTRICAL HAZARD!

Failure to follow this Warning could result in property damage, severe personal injury, or death.

These servicing instructions are for use by qualified personnel only. To reduce the risk of electrical shock, do not perform any servicing other than that contained in these operating instructions unless you are qualified to do so.

⚠ CAUTION

GROUNDING REQUIRED!

Failure to inspect or use proper service tools may result in equipment damage or personal injury.

Reconnect all grounding devices. All parts of this product that are capable of conducting electrical current are grounded. If grounding wires, screws, straps, clips, nuts, or washers used to complete a path to ground are removed for service, they must be returned to their original position and properly fastened.

⚠ CAUTION

SHARP EDGE HAZARD!

Failure to follow this Caution could result in property damage or personal injury.

Be careful of sharp edges on equipment or any cuts made on sheet metal while installing or servicing.

⚠ WARNING

UNIT CONTAINS R-454B REFRIGERANT!

Proper service equipment is required. Failure to use proper service tools may result in equipment damage or personal injury.

⚠ WARNING

LEAK DETECTION SYSTEM!

LEAK DETECTION SYSTEM installed. Unit must be powered except for service.

⚠ WARNING

SAFETY HAZARD!

Children should be supervised to ensure that they do not play with the appliance.

⚠ WARNING

SAFETY HAZARD!

This appliance is not to be used by persons (including children) with reduced physical, sensory, or mental capabilities, or lack of experience and knowledge, unless they have been given supervision or instruction concerning the use of the appliance by a person responsible for their safety.

⚠ WARNING

SAFETY HAZARD!

Operating the unit without the access panels properly installed may result in severe personal injury or death.

Do not operate the unit without the evaporator fan access panel or evaporator coil access panel in place.

⚠ WARNING

RISK OF FIRE!

Flammable refrigerant used. To be repaired only by trained service personnel. Do not puncture refrigerant tubing.

Dispose of refrigerant in accordance with federal and/or local regulations.

AIRE Y CLIMA ESPECIALIZADO

⚠ WARNING

WARNING!

This product can expose you to chemicals including lead, which are known to the State of California to cause cancer and birth defects or other reproductive harm. For more information go to www.P65Warnings.ca.gov.

Important: *Wear appropriate gloves, arm sleeve protectors and eye protection when servicing or maintaining this equipment.*

Important: *Air filters and media wheels or plates shall meet the test requirements in UL 900.*

AIRE Y CLIMA
ESPECIALIZADO

Product Specification

Model	5WCZ5048A1
RATED Volts/PH/Hz	208–230/1/60
PERFORMANCE COOLING[a]	
BTUH (High)	46000
Indoor Airflow (CFM) (High)	1600
Power Input (KW)	4.09
BTUH (Low)	36600
Indoor Airflow (CFM) (Low)	1280
Power Input (KW)	2.28
EER2 / SEER2 BTU/Watt-Hr[b]	11.5/15.2
Sound Power Rating [dB(A)][c]	72
PERFORMANCE HEATING	
(High Temp.) BTUH/COP (High)	42000/3.59
Power Input (KW)	3.43
(Low Temp.) BTUH/COP (High)	28000/2.6
Power Input (KW)	3.16
(High Temp.) BTUH/COP (Low)	31400/3.85
Power Input (KW)	2.39
(Low Temp.) BTUH/COP (Low)	17200/2.2
Power Input (KW)	2.29
HSPF2 (BTUH/Watt-Hr)	8.1
POWER CONN. — V/Ph/Hz	208–230/1/60
Min. Brch. Cir. Ampacity[d]	31
Fuse Size — Max. (amps)	45
Fuse Size — Recmd. (amps)	45
COMPRESSOR	2 STAGE SCROLL
VOLTS/PH/HZ	208–230/1/60
R.L. Amps — L.R. Amps	18.3 / 138.0
OUTDOOR COIL — TYPE	SPINE FIN
Rows/F.P.I	2 / 24
Face Area (sq. ft.)	23.57
Tube Size (in.)	3/8
Refrigerant Control	EXPANSION VALVE
INDOOR COIL — TYPE	PLATE FIN
Rows/F.P.I	4 / 15

Model	5WCZ5048A1
Face Area (sq. ft.)	5
Tube Size (in.)	3/8
Refrigeration Control	EXPANSION VALVE
Drain Conn. Size (in.)	3/4 FEMALE NPT
OUTDOOR FAN — TYPE	PROPELLER
DIA. (IN.)	28.0
DRIVE/NO. SPEEDS	DIRECT/ 1
CFM @ 0.0 in. w.g.[e]	4200
Motor— HP/R.P.M	1/6 / 830
Volts/Ph/Hz	208-230/1/60
F.L. Amps/L.R Amps	0.85 / 1.95
INDOOR FAN — TYPE	CENTRIFUGAL
Dia. x Width (in.)	10 x 10
Drive/No. Speeds	DIRECT / VARIABLE
CFM @ 0.0 in. w.g.[f]	SEE FAN PERFORMANCE TABLE
Motor—HP/R.P.M.	3/4 / VARIABLE
Volts/Ph/Hz	208–230/1/60
F.L. Amps/L.R Amps	6.8 / 6.8
FILTER/ FURNISHED	NO
Type Recommended	THROWAWAY
Recmd. Face Area (sq. ft)[g]	5.3
REFRIGERANT	R-454B
Charge (lbs.)	7.2
Subcooling	11° F
DIMENSIONS	H X W X L
Crated (in.)	52 X 47 X 62
WEIGHT / Shipping / Net (lbs.)	613 / 485

(a) Rated in accordance with AHRI Standard 210/240.
(b) Rated in accordance with D.O.E. test procedure.
(c) Sound Power values are not adjusted for AHRI 270–95 tonal corrections.
(d) Calculated in accordance with currently prevailing Nat'l Electrical Code.
(e) Standard Air — Dry Coil — Outdoor.
(f) Standard Air — Dry Coil — Indoor.
(g) Filters must be installed in return air stream. Square footages listed are based on 300 f.p.m. face velocity. If permanent filters are used size per manufacturer's recommendation with a clean resistance of 0.05" W.C.

Pressure Curves

Figure 1. PRESSURE CURVES FOR 5WCZ5048

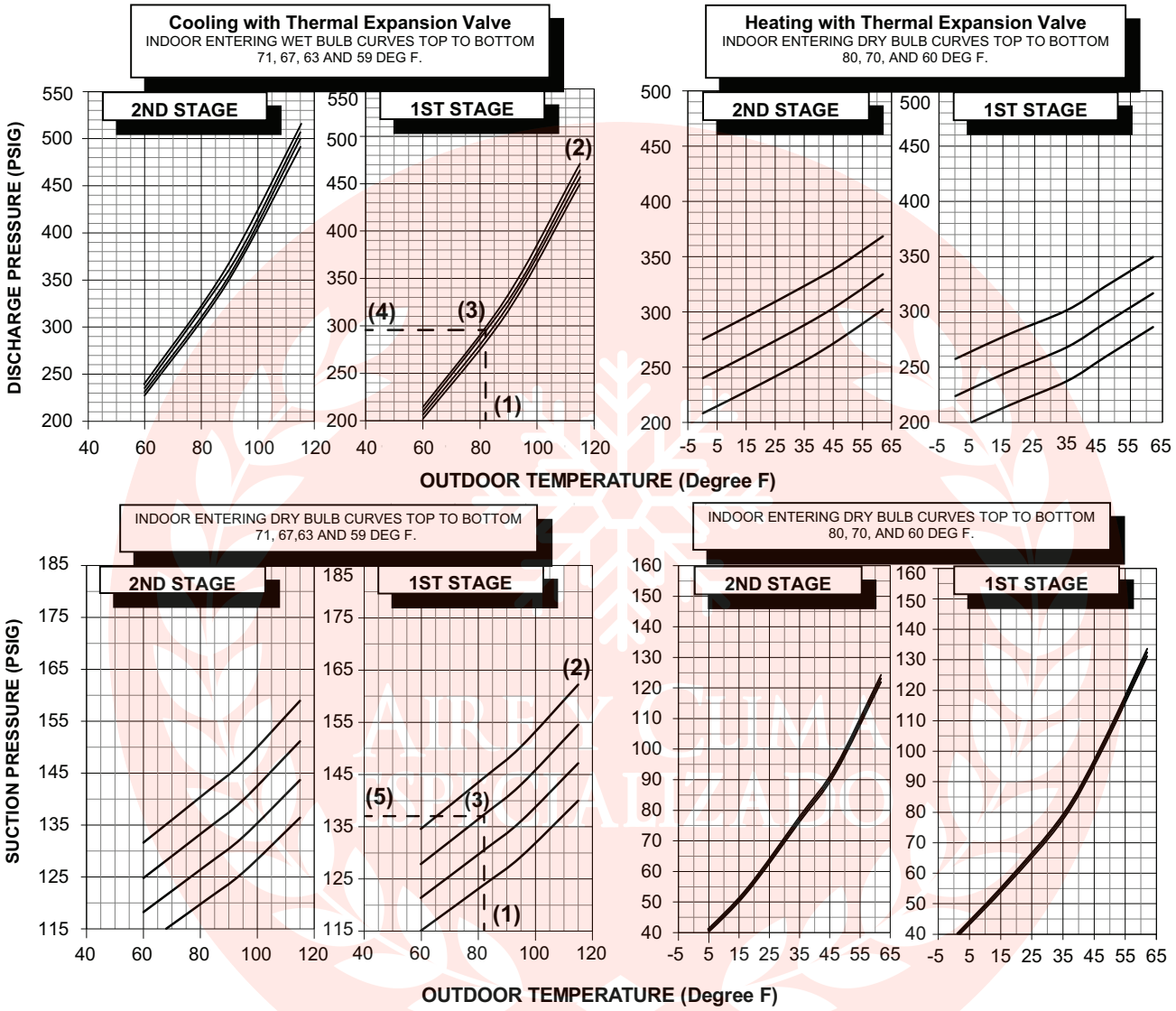

COOLING PERFORMANCE CAN BE CHECKED WHEN THE OUTDOOR TEMP IS ABOVE 65 DEG F.

TO CHECK COOLING PERFORMANCE, SELECT THE PROPER INDOOR CFM, ALLOW PRESSURES TO STABILIZE. MEASURE INDOOR WET BULB TEMPERATURE, OUTDOOR TEMPERATURE, DISCHARGE AND SUCTION PRESSURES. ON THE PLOTS LOCATE OUTDOOR TEMPERATURE (1); LOCATE INDOOR WET BULB (2); FIND INTERSECTION OF OD TEMP. & ID W.B. (3); READ DISCHARGE OR SUCTION PRESSURE IN LEFT COLUMN (4).

EXAMPLE: (1) OUTDOOR TEMP. 82 F.
(2) INDOOR WET BULB 67 F.
(3) AT INTERSECTION
(4) DISCHARGE PRESSURE @ 1300 CFM CFM IS 296 PSIG.
(5) SUCTION PRESSURE @ 1300 CFM CFM IS 137 PSIG.

ACTUAL:
DISCHARGE PRESSURE SHOULD BE +/- 10 PSI OF CHART
SUCTION PRESSURE SHOULD BE +/- 3 PSIG OF CHART

DWG.NO. 5WCZ5048

Charging in Cooling above 55°F OD Ambient

If servicing the equipment requires system evacuation, then re-charge the system to the weight specified on the nameplate. Verify the system subcooling using the Subcooling Charging Table and, if necessary, adjust the charge using the procedure below.

1. For best results — the indoor temperature should be kept between 70°F to 80°F. Add system heat if needed.
2. Whenever charge is removed or added, the system must be operated for a minimum of 20 minutes to stabilize before accurate measurements can be made.
3. Measure Liquid Line Temperature and Refrigerant Pressure at service valved in the compressor compartment.
4. Locate your liquid line temperature in the left column of the table, and the intersecting liquid line pressure under the subcool value column, Add refrigerant to raise the pressure to match the table, or remove refrigerant to lower the pressure. Again, wait 20 minutes for the system conditions to stabilize before adjusting charge again.

Note: *System charge shall never be more than 110% or less than 90% of nameplate charge. If specified subcooling cannot be achieved within those charge bounds, contact your Field Service Representative.*

5. When system is correctly charged, you can refer to System Pressure Curves to verify typical performance.

CHARGING BELOW 55°F

Evacuate system and weigh in nameplate charge or use factory charge. Correct subcooling may be verified when the temperature is above 55°F.

R-454B REFRIGERANT CHARGING CHART									
LIQUID TEMP (°F)	DESIGN SUBCOOLING (°F)								
	6	7	8	9	10	11	12	13	14
	LIQUID GAGE PRESSURE (PSI)								
55	164	167	170	172	175	178	181	184	187
60	178	181	184	187	190	194	197	200	203
65	193	197	200	203	206	210	213	217	220
70	210	213	217	220	223	227	230	234	238
75	227	230	234	238	241	245	249	252	256
80	245	249	252	256	260	264	268	272	276
85	264	268	272	276	280	284	288	292	297
90	284	288	292	297	301	305	309	314	318
95	305	309	314	318	323	327	332	336	341
100	327	332	336	341	346	351	355	360	356
105	351	355	360	365	370	375	380	385	390
110	375	380	385	390	396	401	406	412	417
115	401	406	412	417	422	428	433	439	445
120	428	433	439	445	450	456	462	468	474
125	456	462	468	474	480	486	492	498	504

Charging Below 55°F OD Ambient in Heating Only

1. The Subcool Charging Method in cooling is NOT recommended below 55°F outdoor ambient.
2. The only recommended method of charging at outdoor ambients below 55°F, is to weigh in the charge in the heating mode.
3. Use Nameplate charge.
4. Check liquid line temperature and pressure (at the OD valves) to obtain a minimum of the subcooling shown in the subcooling table.
5. Add charge if the minimum subcooling as shown in the table is not obtained with the nameplate charge.
6. It is important to return in the spring or summer to accurately charge the system in the cooling mode at outdoor ambients above 55°F.

⚠ CAUTION

CONTAINS REFRIGERANT!

Failure to follow proper procedures can result in personal illness or injury or severe equipment damage.

System contains oil and refrigerant under high pressure. Recover refrigerant to relieve pressure before opening system.

Wiring Diagrams

Figure 2. 5WCZ5048A1

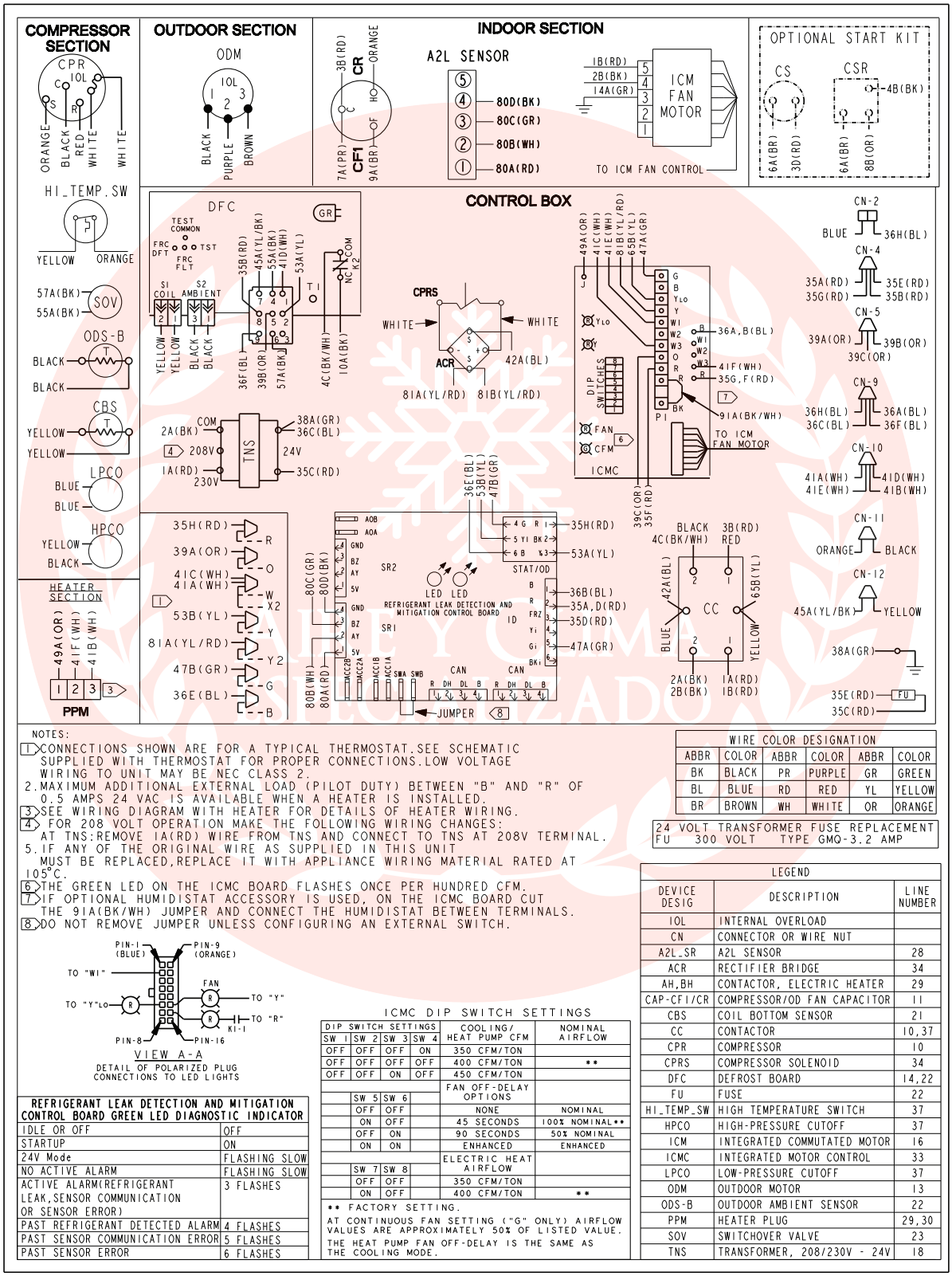

NOTES:

1. CONNECTIONS SHOWN ARE FOR A TYPICAL THERMOSTAT.SEE SCHEMATIC SUPPLIED WITH THERMOSTAT FOR PROPER CONNECTIONS.LOW VOLTAGE WIRING TO UNIT MAY BE NEC CLASS 2.
2. MAXIMUM ADDITIONAL EXTERNAL LOAD (PILOT DUTY) BETWEEN "B" AND "R" OF 0.5 AMPS 24 VAC IS AVAILABLE WHEN A HEATER IS INSTALLED.
3. SEE WIRING DIAGRAM WITH HEATER FOR DETAILS OF HEATER WIRING.
4. FOR 208 VOLT OPERATION MAKE THE FOLLOWING WIRING CHANGES: AT TNS:REMOVE 1A(RD) WIRE FROM TNS AND CONNECT TO TNS AT 208V TERMINAL.
5. IF ANY OF THE ORIGINAL WIRE AS SUPPLIED IN THIS UNIT MUST BE REPLACED,REPLACE IT WITH APPLIANCE WIRING MATERIAL RATED AT 105°C.
6. THE GREEN LED ON THE ICMC BOARD FLASHES ONCE PER HUNDRED CFM.
7. IF OPTIONAL HUMIDISTAT ACCESSORY IS USED, ON THE ICMC BOARD CUT THE 91A(BK/WH) JUMPER AND CONNECT THE HUMIDISTAT BETWEEN TERMINALS.
8. DO NOT REMOVE JUMPER UNLESS CONFIGURING AN EXTERNAL SWITCH.

WIRE COLOR DESIGNATION

ABBR	COLOR	ABBR	COLOR	ABBR	COLOR
BK	BLACK	PR	PURPLE	GR	GREEN
BL	BLUE	RD	RED	YL	YELLOW
BR	BROWN	WH	WHITE	OR	ORANGE

24 VOLT TRANSFORMER FUSE REPLACEMENT
FU 300 VOLT TYPE GMQ-3.2 AMP

LEGEND

DEVICE DESIG	DESCRIPTION	LINE NUMBER
1OL	INTERNAL OVERLOAD	
CN	CONNECTOR OR WIRE NUT	
A2L_SR	A2L SENSOR	28
ACR	RECTIFIER BRIDGE	34
AH,BH	CONTACTOR, ELECTRIC HEATER	29
CAP-CF1/CR	COMPRESSOR/OD FAN CAPACITOR	11
CBS	COIL BOTTOM SENSOR	21
CC	CONTACTOR	10,37
CPR	COMPRESSOR	10
CPRS	COMPRESSOR SOLENOID	34
DFC	DEFROST BOARD	14,22
FU	FUSE	22
HI_TEMP_SW	HIGH TEMPERATURE SWITCH	37
HPCO	HIGH-PRESSURE CUTOFF	37
ICM	INTEGRATED COMMUTATED MOTOR	16
ICMC	INTEGRATED MOTOR CONTROL	33
LPCO	LOW-PRESSURE CUTOFF	37
ODM	OUTDOOR MOTOR	13
ODS-B	OUTDOOR AMBIENT SENSOR	22
PPM	HEATER PLUG	29,30
SOV	SWITCHOVER VALVE	23
TNS	TRANSFORMER, 208/230V - 24V	18

REFRIGERANT LEAK DETECTION AND MITIGATION CONTROL BOARD GREEN LED DIAGNOSTIC INDICATOR

IDLE OR OFF	OFF
STARTUP	ON
24V Mode	FLASHING SLOW
NO ACTIVE ALARM	FLASHING SLOW
ACTIVE ALARM(REFRIGERANT LEAK,SENSOR COMMUNICATION OR SENSOR ERROR)	3 FLASHES
PAST REFRIGERANT DETECTED ALARM	4 FLASHES
PAST SENSOR COMMUNICATION ERROR	5 FLASHES
PAST SENSOR ERROR	6 FLASHES

ICMC DIP SWITCH SETTINGS

DIP SWITCH SETTINGS				COOLING/ HEAT PUMP CFM	NOMINAL AIRFLOW
SW 1	SW 2	SW 3	SW 4		
OFF	OFF	OFF	ON	350 CFM/TON	
OFF	OFF	OFF	OFF	400 CFM/TON	**
OFF	OFF	ON	OFF	450 CFM/TON	
				FAN OFF-DELAY OPTIONS	
	SW 5	SW 6			
	OFF	OFF		NONE	NOMINAL
	ON	OFF		45 SECONDS	100% NOMINAL**
	OFF	ON		90 SECONDS	50% NOMINAL
	ON	ON		ENHANCED	ENHANCED
				ELECTRIC HEAT AIRFLOW	
	SW 7	SW 8			
	OFF	OFF		350 CFM/TON	
	ON	OFF		400 CFM/TON	**

** FACTORY SETTING.

AT CONTINUOUS FAN SETTING ("G" ONLY) AIRFLOW VALUES ARE APPROXIMATELY 50% OF LISTED VALUE.

THE HEAT PUMP FAN OFF-DELAY IS THE SAME AS THE COOLING MODE.

AIRE Y CLIMA
SINCRONIZADO

Figure 3. 5WCZ5048A1

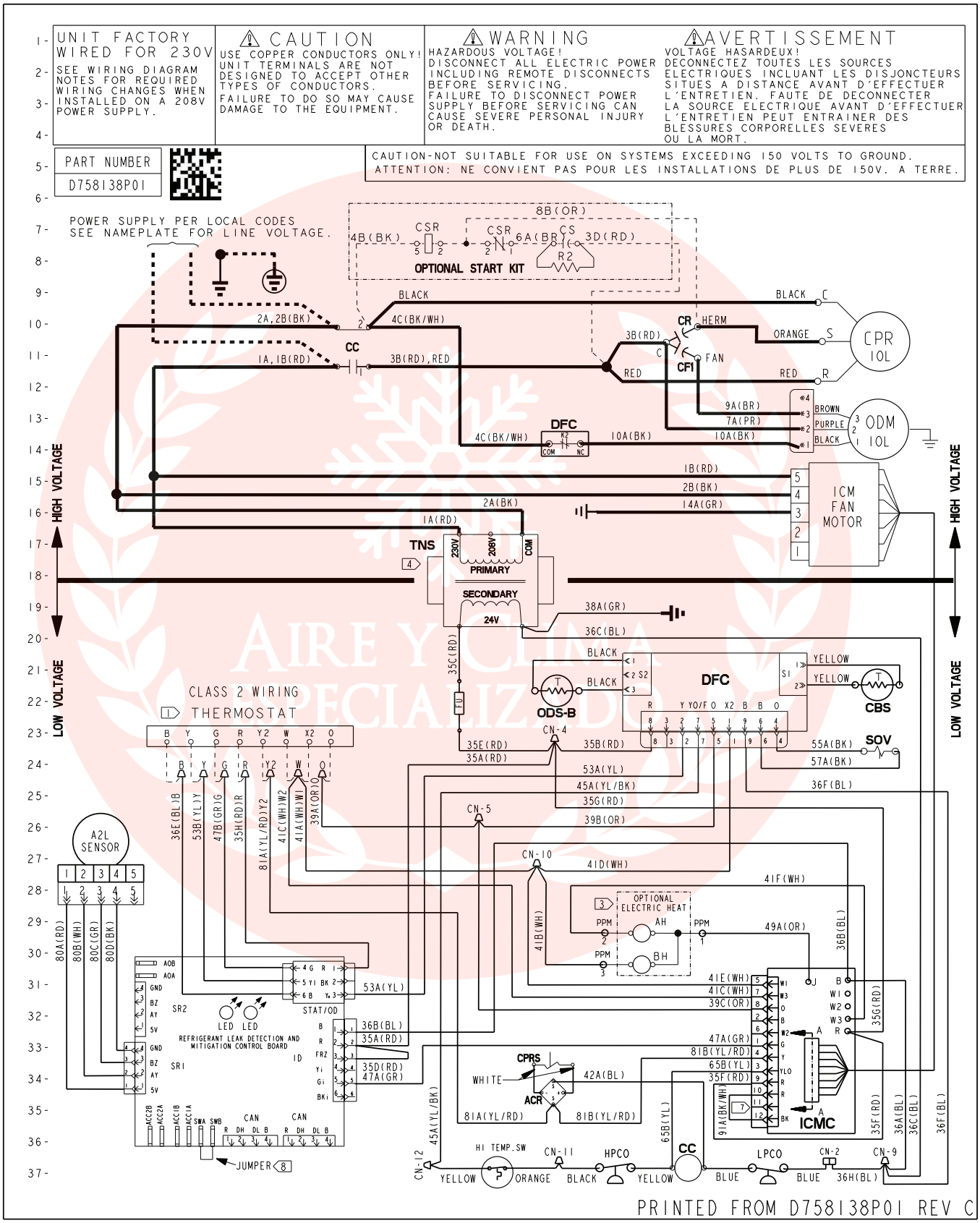

Sequence of Operation

General

Operation of the unit heating and cooling cycles is automatic when the system is set to **HEAT** or **COOL** (the optional automatic changeover thermostat, when set to **AUTO**, automatically changes to heat or cool with an appropriate room temperature change). The fan can be set to **ON**, causing continuous evaporator (indoor) fan operation or set to **AUTO** causing fan operation to coincide with heating or cooling run cycles. Continuous fan mode during cooling operation may not be appropriate in humid climates. If the indoor air exceeds 60% relative humidity or simply feels uncomfortably humid, it is recommended that the fan only be used in the **AUTO** mode. With the thermostat set to **ON** current is supplied to the control transformer (on 460V models the outdoor fan relay (ODF) is energized through normally closed contacts on the defrost control (DFC).

Cooling Mode

Thermostat call for cooling (2-stage thermostat)

Call for 1st stage cooling only:

With the room thermostat set to **COOL** and the fan set to **AUTO**, power is supplied from the room thermostat "O" terminal to the unit switchover valve coil (SOV) and the "O" terminal on the ECMC board. This energizes the switch-over valve (SOV) placing it in the position for cooling (it is in the position for heating when deenergized). On a call for cooling, power is supplied to the unit from the room thermostat (Y1) and (G) terminal. (Y1) provides power to the compressor contactor (CC), the defrost control (DFC) and the electronically commutated motor control (ECMC). (G) provides power to the (ECMC) for low speed (IDM) indoor fan motor operation.

The energized compressor contactor (CC) completes the circuit to the compressor for 1st stage (Low) operation and the outdoor single speed fan motor (ODM). The (G) signal energizes the (ECMC) for the indoor fan motor (ECM) to operate on low speed. The thermostat will continue to cycle the compressor and fans to maintain the desired temperature.

Call for 2nd stage after 1st stage

On a call for 2nd stage cooling, power is supplied from the room thermostat (Y2) terminal to the A/C rectifier (ACR) and the (ECMC). This energizes the (ACR) switching the compressor to 2nd stage (High) operation. The (ECMC) is energized for indoor fan motor (ECM) high speed fan operation. The room thermostat will continue to cycle the system between 1st and 2nd stage to maintain the desired temperature.

Heating Mode

Thermostat call for heat (2-stage thermostat)

Call for 1st stage heating only:

With the room thermostat set to HEAT and the fan set to AUTO, no power is supplied from the room thermostat "O" terminal to the unit switchover valve coil (SOV) and the "O" terminal on the ECMC board. This leaves the switch-over valve (SOV) in the normal position for heating and is the signal for the (ECMC) to run at indoor fan speeds designed for heating. On a call for heating, power is supplied to the unit from the room thermostat (Y1) and (G) terminal. (Y1) provides power to the compressor contactor (CC), the defrost control (DFC) and the electronically commutated motor control (ECMC). (G) provides power to the (ECMC) for low speed (ECM) indoor fan motor operation.

The energized compressor contactor (CC) completes the circuit to the compressor for 1st stage (Low) operation and the outdoor single speed fan motor (ODM). The indoor fan motor (ECM) will operate on low speed. The room thermostat will continue to cycle the compressor and fans to maintain the desired temperature.

Call for 2nd stage after 1st stage

On a call for 2nd stage heating, power is supplied from the room thermostat (Y2) terminal to the compressor rectifier (ACR) and the (ECMC). This energizes the (ACR) switching the compressor to 2nd stage (High) operation. The (ECMC) is energized for indoor fan motor (ECM) high speed fan operation. The room thermostat will continue to cycle the system between 1st and 2nd stage to maintain the desired temperature.

Supplementary Heat

The supplementary electric heat is brought on when the indoor temperature drops 1-1/2 degrees below the thermostat setting. **TSH-2** contacts close providing power to the "**W**" terminal on the indoor thermostat and to the supplementary heater control circuit. An outdoor thermostat may have been added to disallow the second stage (if provided) of electric heat above a selected outdoor temperature. If the outdoor temperature falls below the setting on the outdoor thermostat, this additional heater stage will come on. When the outdoor air temperature rises, and the outdoor T-stat setpoint is reached, the system will revert back to first stage electric heating.

When the indoor ambient is satisfied, **TSH-2** contacts will open and the unit will revert back to the compressor only heating mode and then off. For **emergency heat** (use of supplementary electric heat only), an emergency **(EMERG)** heat switch is provided within the comfort control. When placed in the emergency heat position, it will disable the compressor, bypass the outdoor thermostats, if

provided, and engage the supplementary electric heaters and indoor fan.

Demand Defrost Operation

During the heating cycle, the outdoor coil may require a defrost cycle which is determined by the demand defrost control (DFC). This control continuously measures the outdoor coil temperature (CBS) and the outdoor ambient temperature (ODS-B) and calculates the difference or delta-T measurement. When the calculated delta-T is met, the demand defrost control (DFC) opens the circuit to the outdoor fan motor (ODM) and energizes the switch-over valve (SOV), placing the unit in the cooling mode to defrost the outdoor coil (on SCROLL bearing units only, the control will stop the compressor for a minimum of thirty (30) seconds). The outdoor coil temperature sensor (CBS) terminates the defrost cycle, or it times off after twelve (12) minutes in defrost, the (DFC) energizes the outdoor fan motor (ODM) and twelve seconds later de-energizes the (SOV), which returns the unit to the heating mode. Supplementary electric heat, if provided, is brought on to control indoor temperature during the defrost cycle. During this defrost cycle the indoor fan will run at the speed designated for 2nd stage cooling.

Defrost Control

The demand defrost control measures heat pump outdoor ambient temperature with a sensor located outside the outdoor coil. A second sensor located on the outdoor coil is used to measure the coil temperature. The difference between the ambient and the colder coil temperature is the difference or delta-T measurement. This delta-T measurement is representative of the operating state and relative capacity of the heat pump system. Measuring the change in delta-T determines the need for defrost. The coil sensor also senses outdoor coil temperature for termination of the defrost cycle.

ECM Fan Motor Adjustments

If the airflow needs to be increased or decreased, see the Airflow Table in the Service Facts. Information on changing the speed of the blower motor is in the Blower Performance Table.

Blower speed changes are made on the ICM Fan Control mounted in the control box. The ICM Fan Control controls the variable speed motor.

There is a bank of 8 dip switches located at the upper left side of the board. The dip switches work in pairs to match the cooling/heat airflow (CFM/TON), Fan off-delay options, and electric heat airflow adjustment. The switches appear as shown in Figure 4, p. 10.

Figure 4. ECM Fan Control

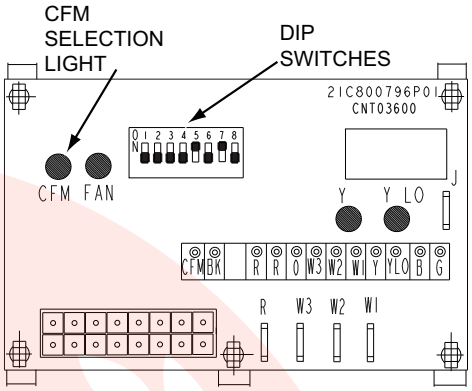

Table 1. Cooling Off - Delay Options

SWITCH SETTNGS		SELECTION	NOMINAL AIRFLOW
5 - OFF	6 - OFF	NONE	SAME
5 - ON	6 - OFF	45 SECONDS	100%*
5 - OFF	6 - ON	1.5 MINUTES	50%
5 - ON	6 - ON	**	50 -100%
* - This setting is equivalent to the BAY24X045 relay benefit.			
** - This ENHANCED MODE selection provides a ramping up and ramping down of the blower speed to provide improved comfort, quietness, and potential energy savings. The graph below show the ramping process.			

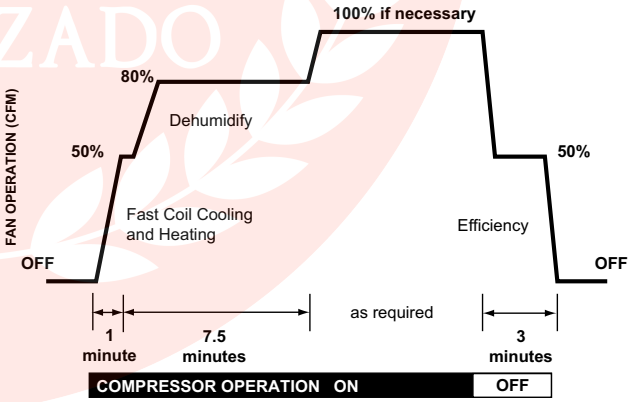

Maintenance

Owner Maintenance

Some of the periodic maintenance functions of the unit can be performed by the owner; this includes replacing the disposable or cleaning the permanent air filters, cleaning the unit cabinet, cleaning the condenser coil, and conducting a general unit inspection on a regular basis.

Filters

When the system is in constant operation, inspect the filters at least once each month.

If the unit has disposable-type filters, replace them with new filters of the same type and size. **Do not attempt to clean disposable filters.**

Permanent-type filters can be cleaned by washing them with a mild detergent and water. Make sure that the filters are thoroughly dry before reinstalling them in the unit (or duct system).

Note: *It may be necessary to replace permanent filters annually if washing fails to clean the filter or if the filter shows signs of deterioration. Be sure to use the same type and size as was originally installed.*

Condenser Coil

Be sure to keep all vegetation and debris away from the condenser coil area.

Service Maintenance

Cooling Season

To keep the unit operating safely and efficiently, the manufacturer recommends that a qualified service technician check the entire system at least once each year or sooner if needed. The service technician should examine these areas of the unit:

- filters (for cleaning or replacement)
- motors and drive system components
- economizer gaskets (for possible replacement)
- safety controls (for mechanical cleaning)
- electrical components and wiring (for possible replacement and connection tightness)
- condensate drain (for proper sealing and cleaning)
- unit duct connections (to see that they are physically sound and sealed to the unit casing)
- unit mounting support (for structural integrity)
- the unit (for obvious unit deterioration)

Heating Season

Complete the following unit inspections and service routines at the beginning of each heating season.

- Visually inspect the unit to ensure that the airflow required for combustion and condenser coil is not obstructed from the unit.
- Inspect the control panel wiring to verify that all electrical connections are tight and that the wire insulation is intact.

Indoor Airflow Motor Speed Tap Setting

The units are factory set to Medium Low Speed.

If an electric Heater is installed refer to the electric heater nameplate for minimum airflow settings.

Fault Detection

A fault condition is indicated by the flashing light on the defrost control board located inside the heat pump control box.

In normal operation, the defrost control light will flash once each second. If the light is flashing more than once per second or not at all, refer to the Demand Defrost Control Checkout table.

PIN Identification

1. TEST_COMMON (Shorting any of the other pins to this pin causes the function of the other pin to be executed. Leaving this pin open results in the normal mode of operation.)
2. TST = Test (Shorting TEST_COMMON to this pin speeds up all defrost board timings.)
3. FRC_DFT = Forced Defrost (Short TEST_COMMON to this pin for two (2) seconds to initiate a forced defrost. Remove the short after defrost initiates.)

Defrost Control Checkout

Normal operation requires:

- LED on board flashing 1 time/second.
- 24V AC between R & B
- 24V AC between Y & B with unit operating
- Defrost initiation when FRC_DFT pin is shorted to TEST_COMMON pin.

If a defrost control problem is suspected, proceed to the Demand Defrost Control Checkout table.

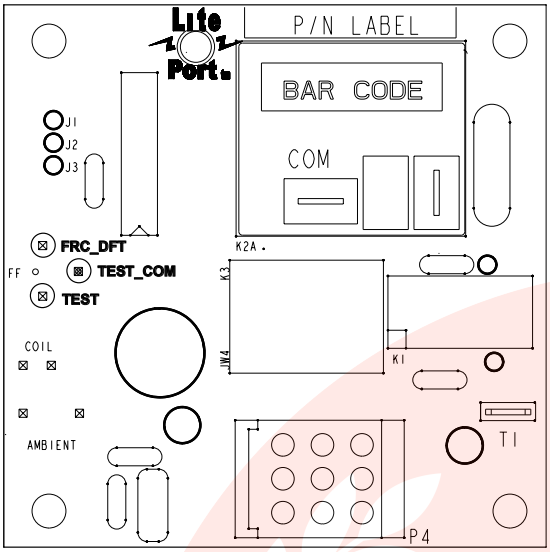

1 — Flash/ Second	= Normal operation.
2 — Flashes/ Second	= Fault A (Low ΔT): Inoperative compressor, loss of charge, open ambient sensor, shorted coil sensor.
3 — Flashes/ Second	= Fault B (20 defrosts terminated on time) Fault C (High ΔT): SOV stuck in heating, shorted ambient sensor, open coil sensor, closed TXV, OD motor failure, OD fan on in defrost, undercharged unit.
4 — Flashes/ Second	= Fault A & C or A & B

For additional information consult Pub. No. 34–1001 Heat Pump Defrost Controls.

Test Sensors

Using the chart below, locate (as close as possible) the actual sensor temperature. The measured resistance should be relatively close to the resistance value shown in the chart.

Example:

Sensor temp. = 19°F.

Measured Resistance = 46K ohms

This sensor is good since the measured value is relatively close to the chart value.

TEMP (°F)	RESISTANCE
86	7.85K
81	8.85K
75	10.24K
70	11.59K
65	13.14K
59	15.32K
55	16.93K
50	19.41K
45	22.20K
41	24.76K
36	28.45K
32	31.84K
25	37.50K
19	46.44K
14	53.94K
10	57.64K
5	67.06K
0	78.05K

Table 2. Demand Defrost Control Checkout Table

SYMPTOMS	CHECKS	YES/NO	ACTIONS
1. LED off.	1. 24V R-B & Y-B at board, with unit running?	N	Repair low voltage wiring.
		Y	Complete Check #2.
	2. Short FRC_DFT pin to TEST_COMMON pin. Is defrost cycle initiated?	N	Replace defrost control.
		Y	LED is bad but control will still function.
2. LED flashing very rapidly (greater than 4 times/ sec) or appears to be on continuously.	TEST_COMMON pin shorted to TST pin?	Y	Remove short.
		N	Replace defrost control.
3. Control does not initiate a normal defrost.	1. OD Temp. below 49°F.? OD Coil temp. below 35°F.? "Delta" T increasing	N	Check refrigerant circuits for balanced distribution of refrigerant if OD coil is frosting and delta T is not increasing.
	2. LED flashing?	N	Refer to SYMPTOM #1.
		Y	Complete Check #2.
	3. Check for 24V Y-B at board with unit running.	N	Repair low voltage wiring.
		Y	Complete Check #3.
	4. Check sensors for correct mounting (connection) and resistance.		Remount or replace sensor if necessary.
	5. Short FRC_DFT pin to TEST_COMMON pin. Is defrost cycle initiated?	N	Replace defrost control.
		Y	Y-B signal or control may be intermittent.

AIRE Y CLIMA ESPECIALIZADO

Table 2. Demand Defrost Control Checkout Table (continued)

SYMPTOMS	CHECKS	YES/NO	ACTIONS
4. Control does not initiate a forced defrost.	24V R-B & Y-B at board with unit running?	N	Repair low voltage wiring.
		Y	Replace defrost control.
5. Defrost initiates manually but terminates in less than 10 seconds.			Replace defrost control.
6. Defrost initiates manually but terminates on time.	1. Coil sensor circuit open or reading at a very high resistance?	Y	Replace coil sensor.
	2. Does OD fan cycle off in defrost?	N	Replace defrost control.
	3. Windy weather preventing normal termination?		
7. Defrost initiates on approximately 15/25 minute intervals.	1. Be sure OD coil is clean.	N	Complete Check #2.
	2. Coil sensor open or reading a very high resistance?	Y	Replace coil sensor.
	3. Ambient sensor reading less than normal?	N	Complete Check #3.
		Y	Replace ambient sensor.
	4. OD fan off in defrost?	N	Replace defrost control.
8. Defrost initiates on approximately 30/45 minute intervals.	1. TEST_COMMON pin shorted to TST pin?	Y	Remove short.
	2. Do both sensors check OK?	N	Replace defective sensor (Clear coil and re gency heat light).
		Y	Complete SYMPTOM #3.
	3. Verify correct system charge.		Adjust as needed.
	4. Verify a "forced defrost" terminates less than 15 minutes.	N	Replace defrost control.
	5. OD fan motor off in defrost.		See SYMPTOM #9.
	6. Verify proper SOV operation.		Replace if necessary.
9. OD fan runs during defrost.			Replace defrost control.
10. No SOV delay on defrost termination.	Has J1 been cut?	Y	The soft-switch time is defeated when J1 is cut.
		N	Replace defrost control.
11. ODS-A burned out.	B to T greater than 10 volts?	Y	Check low voltage wiring for miswire.
		N	Check for short in low voltage wiring.
12. On SCROLL bearing units, compressor does not operate.	1. 24V R-B at board & 24V Y-B at board?	N	Repair low voltage wiring.
	2. Check protective devices in YO circuit. 24V YO-B present after 30 seconds.	N	Y-B signal or control may be intermittent
13. On SCROLL bearing units, no 30 second off delay at defrost initiation.	Check voltage between control terminals 2 and 7, force a defrost cycle. Is 24V present for 30 seconds and 0V thereafter?	N	Replace defrost control.

AIRE Y CLIMA ESPECIALIZADO

Indoor Fan Performance

5WCZ5048		EXTERNAL STATIC PRESSURE (IN.WG) Cooling CFM Horizontal [Downflow]										
Motor Speed		0.0	0.1	0.2	0.3	0.4	0.5	0.6	0.7	0.8	0.9	1.0
350 CFM / Ton Setting	Low	-	954 [948]	973 [977]	977 [977]	973 [970]	966 [969]	957 [975]	950 [979]	944 [962]	-	-
	High	-	1363 [1354]	1390 [1396]	1396 [1396]	1390 [1386]	1379 [1384]	1368 [1393]	1358 [1399]	1349 [1375]	-	-
400 CFM / Ton Setting[a]	Low	-	1121 [1102]	1106 [1106]	1104 [1109]	1106 [1113]	1108 [1116]	1108 [1119]	1104 [1120]	1097 [1118]	-	-
	High	-	1601 [1574]	1580 [1580]	1577 [1585]	1580 [1589]	1583 [1594]	1583 [1599]	1577 [1601]	1567 [1597]	-	-
450 CFM / Ton Setting	Low	-	1223 [1295]	1254 [1277]	1268 [1272]	1271 [1273]	1268 [1274]	1264 [1273]	1261 [1272]	1258 [1273]	-	-
	High	-	1747 [1851]	1792 [1824]	1811 [1817]	1816 [1818]	1812 [1820]	1806 [1819]	1801 [1817]	1797 [1819]	-	-

[a] Factory Default Setting.

Airflow with Auxilary Heat (CFM)			
SWITCH SETTINGS		SELECTION	NOMINAL AIRFLOW
			5WCZ5048
7 - OFF	8 - OFF	LOW	1400 CFM
7 - ON	8 - OFF	HIGH	1600 CFM
7 - OFF	8 - ON	HIGH	1600 CFM
7 - ON	8 - ON	HIGH	1600 CFM

AIRE Y CLIMA ESPECIALIZADO

Refrigerant Circuit

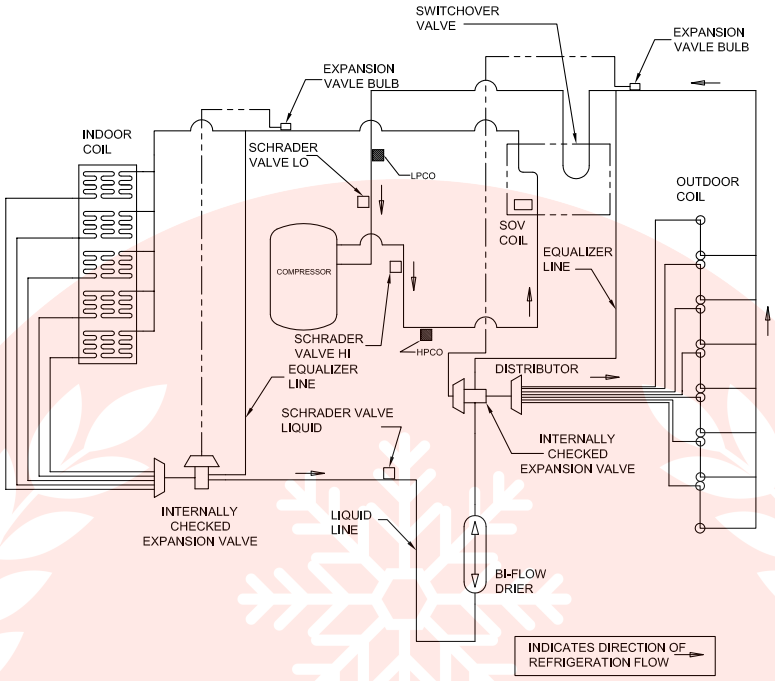

Heating Refrigeration Cycle

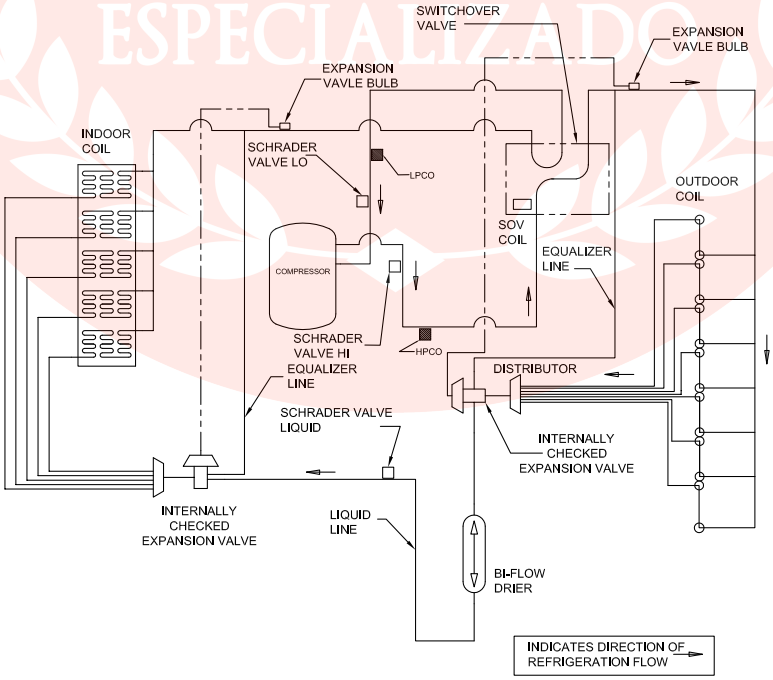

Cooling Refrigeration Cycle

AIRE Y CLIMA ESPECIALIZADO

Troubleshooting Chart

P-PRIMARY CAUSES / S-SECONDARY CAUSES

SYSTEM FAULTS	Power Supply	High Voltage Wiring	Compr. IOL	Run Capacitor	Start capacitor	Start Relay	Contactor Contacts	Low Voltage Wiring	Control Transformer	Contactor Coil	Low Voltage Fuse	Stuck Compressor	Ineffecient Compressor	Refrigerant Undercharge	Refrigerant Overcharge	Excessive Evap. Load	Noncondensables	Restricted O.D. Airflow	O.D. Air Recirculation	TXV Stuck Open	Low Superheat	High Superheat	Restricted I.D. Airflow	Ref. Circuit Restrictions	Mitigation System
REFRIGERANT CIRCUIT																									
Liquid Pressure too High															P		S	P	S					S	
Liquid Pressure too Low													S	P						S		S		S	
Suction Pressure too High													S		P	P				S	S				
Suction Pressure too Low														S								S	P	S	
Liquid Refrigerant Floodback (TXV System)																				S	S		P		
I.D. Coil Frosting														P							S		P	S	
Compressor Runs Inadequate or No Cooling													S	P		P	S	S	S			S	P	S	
ELECTRICAL																									
Compressor & O.D. Fan Do Not Start	P	P					S	S	P	P	P														P
Compressor will not Start but O.D. Fan Runs		P	S	P	P	P						S													
O.D. Fan will Not Start		P		P																					
Compressor Hums but will Not Start		P		P	P	P	S					S													
Compressor Cycles on IOL		P	S	P	P	P	S					P	S	P	S	S	S	S	S			S		S	
I.D. Blower willnot Start	P	S						S	P		P														

MCB Code Table

Condition	Green LED	Amber LED
Idle or Off	Off	Off
Startup	On	On
No Active Alarm	Slow Flash	On
Active Alarm (Refrigerant Leak, Sensor Communication Error, or Sensor Error)	3 Flash	On
Past Refrigerant Detected Alarm	4 Flash	On
Past Sensor Communication Error	5 Flash	On
Past Sensor Error	6 Flash	On

AIRE Y CLIMA ESPECIALIZADO

Important Product Information

Packaged Unit Serial Number_____

Packaged Unit Model Number_____

Date of Installation_____

Dealer_____

Service Information

Call your installing dealer if the unit is inoperative. Before you call, always check the following to be sure service is required:

1. Be sure the main switch that supplies power to the unit is in the ON position.
2. Replace any burned-out fuses or reset circuit breakers.
3. Be sure the thermostat is properly set.

Service Phone _____

AIRE Y CLIMA ESPECIALIZADO

AIRE Y CLIMA
ESPECIALIZADO

AIRE Y CLIMA
ESPECIALIZADO

AIRE Y CLIMA
ESPECIALIZADO

About Trane and American Standard Heating and Air Conditioning

Trane and American Standard create comfortable, energy efficient indoor environments for residential applications. For more information, please visit www.trane.com or www.americanstandardair.com.

AHRI CERTIFIED®
www.ahridirectory.org
Unitary Small HP
AHRI Standard 210/240
Certification applies only when the complete system is listed with AHRI.

c UL us LISTED

The AHRI Certified mark indicates company participation in the AHRI Certification program. For verification of individual certified products, go to ahridirectory.org.

The manufacturer has a policy of continuous data improvement and it reserves the right to change design and specifications without notice. We are committed to using environmentally conscious print practices.

5WCZ5048A-SF-1A-EN 31 Oct 2024
Supersedes (New)

©2024