Service Facts

Single Packaged Cooling/Electric Heat

5TCC4048A1000A

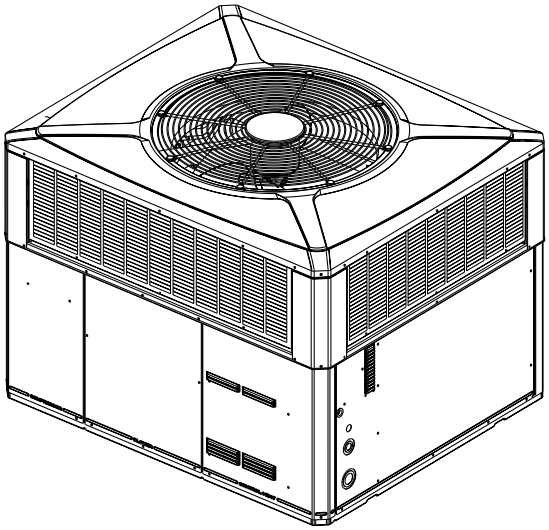

Note: *"Graphics in this document are for representation only. Actual model may differ in appearance."*

⚠ SAFETY WARNING

Only qualified personnel should install and service the equipment. The installation, starting up, and servicing of heating, ventilating, and air-conditioning equipment can be hazardous and requires specific knowledge and training. Improperly installed, adjusted or altered equipment by an unqualified person could result in death or serious injury. When working on the equipment, observe all precautions in the literature and on the tags, stickers, and labels that are attached to the equipment.

September 2024

5TCC4048A-SF-1A-EN

SAFETY SECTION

Important: *This document contains a wiring diagram, a parts list, and service information. This is customer property and is to remain with this unit. Please return to service information pack upon completion of work.*

⚠ WARNING

HAZARDOUS VOLTAGE!

Failure to follow this Warning could result in property damage, severe personal injury, or death.

Disconnect all electric power, including remote disconnects before servicing. Follow proper lockout/tagout procedures to ensure the power cannot be inadvertently energized.

⚠ WARNING

SAFETY AND ELECTRICAL HAZARD!

Failure to follow this Warning could result in property damage, severe personal injury, or death.

These servicing instructions are for use by qualified personnel only. To reduce the risk of electrical shock, do not perform any servicing other than that contained in these operating instructions unless you are qualified to do so.

⚠ CAUTION

GROUNDING REQUIRED!

Failure to inspect or use proper service tools may result in equipment damage or personal injury.

Reconnect all grounding devices. All parts of this product that are capable of conducting electrical current are grounded. If grounding wires, screws, straps, clips, nuts, or washers used to complete a path to ground are removed for service, they must be returned to their original position and properly fastened.

⚠ CAUTION

SHARP EDGE HAZARD!

Failure to follow this Caution could result in property damage or personal injury.

Be careful of sharp edges on equipment or any cuts made on sheet metal while installing or servicing.

⚠ WARNING

UNIT CONTAINS R-454B REFRIGERANT!

Proper service equipment is required. Failure to use proper service tools may result in equipment damage or personal injury.

⚠ WARNING

SERVICE!

USE ONLY R-454B REFRIGERANT AND APPROVED COMPRESSOR OIL.

⚠ WARNING

LEAK DETECTION SYSTEM!

LEAK DETECTION SYSTEM installed. Unit must be powered except for service.

⚠ WARNING

SAFETY HAZARD!

Children should be supervised to ensure that they do not play with the appliance.

⚠ WARNING

SAFETY HAZARD!

This appliance is not to be used by persons (including children) with reduced physical, sensory, or mental capabilities, or lack of experience and knowledge, unless they have been given supervision or instruction concerning the use of the appliance by a person responsible for their safety.

⚠ WARNING

SAFETY HAZARD!

Operating the unit without the access panels properly installed may result in severe personal injury or death.

Do not operate the unit without the evaporator fan access panel or evaporator coil access panel in place.

⚠ WARNING

RISK OF FIRE!

Flammable refrigerant used. To be repaired only by trained service personnel. Do not puncture refrigerant tubing.

Dispose of refrigerant in accordance with federal and/or local regulations.

⚠ WARNING

WARNING!

This product can expose you to chemicals including lead, which are known to the State of California to cause cancer and birth defects or other reproductive harm. For more information go to www.P65Warnings.ca.gov.

Important: *Wear appropriate gloves, arm sleeve protectors and eye protection when servicing or maintaining this equipment.*

Important: *Air filters and media wheels or plates shall meet the test requirements in UL 900.*

AIRE Y CLIMA
ESPECIALIZADO

Product Specification

MODEL	5TCC4048A1000A
RATED Volts/PH/Hz	208–230/1/60
Performance Cooling BTUH [a]	47500
Indoor Airflow (CFM)	1670
Power Input (KW)	4.30
EER2/SEER2 (BTU/Watt-Hr.) [b]	11.0 / 13.4
Sound Power Rating [dB(A)] [c]	72.5
POWER CONN. — V/Ph/Hz	208–230/1/60
Min. Brch. Cir. Ampacity [d]	36
Fuse Size — Max. (amps)	50
Fuse Size — Recmd. (amps)	50
COMPRESSOR	SCROLL
VOLTS/PH/HZ	208–230/1/60
R.L. Amps — L.R. Amps	22.4 / 126
OUTDOOR COIL — TYPE	SPINE-FIN
Rows/F.P.I	2 / 24
Face Area (sq. ft.)	20.54
Tube Size (in.)	3/8
INDOOR COIL — TYPE	MCHE
Rows/F.P.I	2 / 16
Face Area (sq. ft.)	3.9
Tube Size (in.)	0.81
Refrigeration Control	EXPANSION VALVE
Drain Conn. Size (in.)	3/4 FEMALE NPT
OUTDOOR FAN — TYPE	PROPELLER
DIA. (IN.)	28.3
DRIVE/NO. SPEEDS	DIRECT / 1
CFM @ 0.0 in. w.g. [e]	3400
Motor — HP/R.P.M	1/4 / 825

MODEL	5TCC4048A1000A
Volts/Ph/Hz	208–230/1/60
F.L. Amps/L.R Amps	1.5 / 3.07
INDOOR FAN — TYPE	CONSTANT TORQUE ECM
Dia. x Width (in.)	10.62 X 10.62
Drive/No. Speeds	DIRECT / 4
CFM @ 0.0 in. w.g. [f]	SEE FAN PERF TABLE
Motor — HP/R.P.M.	3/4 / 1050
Volts/Ph/Hz	208–230/1/60
F.L. Amps	6.0
FILTER / FURNISHED	NO
Type Recommended	THROWAWAY
Recmd. Face Area (sq. ft) [g]	5.3
REFRIGERANT	R-454B
Charge (lbs.)	6.6
CHARGING SPECIFICATIONS	
Subcooling	10° F
DIMENSIONS	H X W X L
Crated (in.)	50 X 47 X 61
WEIGHT	
Shipping (lbs.) / Net (lbs.)	563 / 459

(a) Rated in accordance with AHRI Standard 210/240.
(b) Rated in accordance with D.O.E. test procedure.
(c) Sound Power values are not adjusted for AHRI 270–95 tonal corrections.
(d) Calculated in accordance with currently prevailing Nat'l Electrical Code.
(e) Standard Air — Dry Coil — Outdoor.
(f) Standard Air — Dry Coil — Indoor
(g) Filters must be installed in return air stream. Square footages listed are based on 300 f.p.m. face velocity. If permanent filters are used size per manufacturer's recommendation with a clean resistance of 0.05" W.C.

Pressure Curves

Figure 1. PRESSURE CURVES FOR 5TCC4048

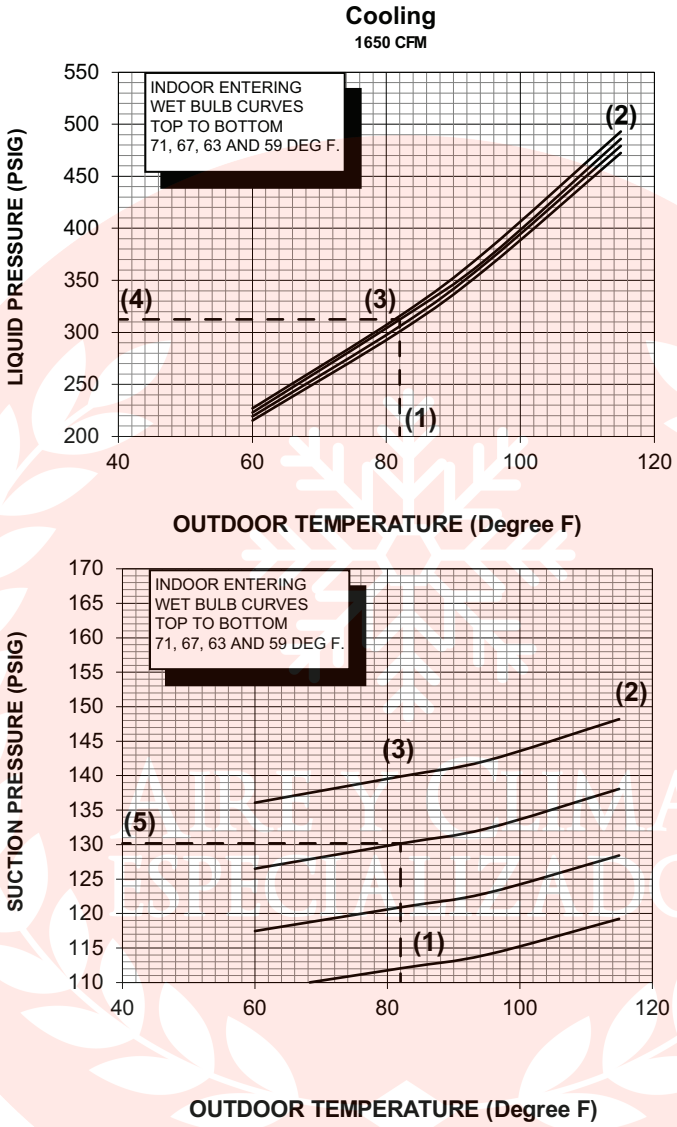

COOLING PERFORMANCE CAN BE CHECKED WHEN THE OUTDOOR TEMP IS ABOVE 65 DEG F.

TO CHECK COOLING PERFORMANCE, SELECT THE PROPER INDOOR CFM, ALLOW PRESSURES TO STABILIZE. MEASURE INDOOR WET BULB TEMPERATURE, OUTDOOR TEMPERATURE, DISCHARGE AND SUCTION PRESSURES. ON THE PLOTS LOCATE OUTDOOR TEMPERATURE (1); LOCATE INDOOR WET BULB (2); FIND INTERSECTION OF OD TEMP. & ID W.B. (3); READ DISCHARGE OR SUCTION PRESSURE IN LEFT COLUMN (4).

EXAMPLE: (1) OUTDOOR TEMP. 82 F.
(2) INDOOR WET BULB 67 F.
(3) AT INTERSECTION
(4) DISCHARGE PRESSURE @ 1650 CFM CFM IS 313 PSIG.
(5) SUCTION PRESSURE @ 1650 CFM CFM IS 130 PSIG.

ACTUAL:
DISCHARGE PRESSURE SHOULD BE +/- 10 PSI OF CHART
SUCTION PRESSURE SHOULD BE +/- 3 PSIG OF CHART

DWG.NO. 5TCC4048

Sequence of Operation

General

Operation of the system cooling (and optional heating) cycles is controlled by the comfort control. Once the comfort control is set to either the HEAT or COOL, unit operation is automatic. The optional automatic changeover comfort control, when set to AUTO, automatically changes to heat or cool with sufficient room temperature change.

With the unit disconnect closed, voltage is supplied to the unit control transformer and the crankcase heater (if provided). On single phase units, the crankcase heater is an option that is field installed.

Cooling Mode

With the comfort control set to COOL and the fan set to AUTO, the compressor contactor (CC) and the indoor fan motor (IDM) are energized.

The energized compressor contactor (CC) completes the circuit to the compressor (CPR) and a secondary circuit to the outdoor fan motor (ODM). If the compressor safety controls are closed, the compressor (CPR) will operate with the outdoor fan motor (ODM). The indoor fan motor (IDM) will operate. The comfort control will continue to cycle the compressor and fans to maintain the desired temperature.

With the fan switch set to ON, the indoor fan motor (IDM) will continue to run regardless of compressor and condenser fan operation. Continuous fan mode during cooling operation may not be appropriate in humid climates. If the indoor air exceeds 60% relative humidity or simply feels uncomfortably humid, it is recommended that the fan only be used in the AUTO mode.

Heating Mode

Heating mode uses electric heaters, which are installed separately. Refer to the Supplemental Electric Heaters Installer's Guide for additional information.

On a call for heat, power from the comfort control is received at "**W1**," which energizes the "**AH**" contactor coil. The "**AH**" contactor closes, powering the heater provided all element limits are closed.

If two stages of heat are provided and additional heat is required, the comfort control's second stage "**W2**" circuit is energized powering the "**BH**" contactor coil.

Note: *The comfort control must be configured to provide a **"G"** signal to energize the indoor fan during the heating mode.*

Table 1. Pressure Drop for Electric Heater

AIRFLOW CFM	NUMBER OF RACKS	
	1	2
	AIR PRESSURE DROP INCHES W.G.	
600	.003	-
800	.004	-
1000	.005	.007
1200	.006	.008
1400	.007	.009
1600	.008	.01
2000	.01	.02
From Dwg. No. 21A730642		

AIRE Y CLIMA
IALIZADO

Indoor Fan Performance (230v)

5TCC4048A1		EXTERNAL STATIC PRESSURE (IN.WG) Horizontal Airflow [Cooling Down Airflow]										
Motor Speed		**0.0**	**0.1**	**0.2**	**0.3**	**0.4**	**0.5**	**0.6**	**0.7**	**0.8**	**0.9**	**1**
LOW	Watts	302 [308]	313 [320]	324 [330]	332 [339]	346 [352]	-	-	-	-	-	-
	CFM	1583 [1567]	1542 [1526]	1502 [1487]	1460 [1445]	1415 [1401]	-	-	-	-	-	-
MED-LOW[a]	Watts	414 [422]	426 [434]	436 [444]	448 [457]	459 [468]	471 [480]	483 [493]	495 [505]	510 [520]	-	-
	CFM	1763 [1745]	1723 [1706]	1689 [1672]	1648 [1632]	1609 [1593]	1568 [1552]	1527 [1512]	1488 [1473]	1447 [1433]	-	-
MED-HIGH	Watts	-	577 [589]	591 [603]	604 [616]	617 [629]	631 [644]	643 [656]	655 [668]	599 [611]	-	-
	CFM	-	1786 [1768]	1757 [1739]	1729 [1712]	1700 [1683]	1675 [1658]	1648 [1632]	1624 [1608]	1504 [1489]	-	-
HIGH	Watts	-	-	-	-	-	613 [625]	631 [644]	643 [656]	647 [660]	611 [623]	-
	CFM	-	-	-	-	-	1769 [1751]	1728 [1711]	1688 [1671]	1652 [1635]	1545 [1530]	-

Note: *Airflow must not exceed 1800 CFM due to condensate blowoff.*

[a] Factory Default Setting.

AIRE Y CLIMA ESPECIALIZADO

Charging in Cooling above 55°F OD Ambient

If servicing the equipment requires system evacuation, then re-charge the system to the weight specified on the nameplate. Verify the system subcooling using the Subcooling Charging Table and, if necessary, adjust the charge using the procedure below.

1. For best results — the indoor temperature should be kept between 70°F to 80°F. Add system heat if needed.
2. Whenever charge is removed or added, the system must be operated for a minimum of 20 minutes to stabilize before accurate measurements can be made.
3. Measure Liquid Line Temperature and Refrigerant Pressure at service valved in the compressor compartment.
4. Locate your liquid line temperature in the left column of the table, and the intersecting liquid line pressure under the subcool value column, Add refrigerant to raise the pressure to match the table, or remove refrigerant to lower the pressure. Again, wait 20 minutes for the system conditions to stabilize before adjusting charge again.

Note: *System charge shall never be more than 110% or less than 90% of nameplate charge. If specified subcooling cannot be achieved within those charge bounds, contact your Field Service Representative.*

5. When system is correctly charged, you can refer to System Pressure Curves to verify typical performance.

CHARGING BELOW 55°F

Evacuate system and weigh in nameplate charge or use factory charge. Correct subcooling may be verified when the temperature is above 55°F.

R-454B REFRIGERANT CHARGING CHART

LIQUID TEMP (°F)	DESIGN SUBCOOLING (°F)								
	6	7	8	9	10	11	12	13	14
	LIQUID GAGE PRESSURE (PSI)								
55	164	167	170	172	175	178	181	184	187
60	178	181	184	187	190	194	197	200	203
65	193	197	200	203	206	210	213	217	220
70	210	213	217	220	223	227	230	234	238
75	227	230	234	238	241	245	249	252	256
80	245	249	252	256	260	264	268	272	276
85	264	268	272	276	280	284	288	292	297
90	284	288	292	297	301	305	309	314	318
95	305	309	314	318	323	327	332	336	341
100	327	332	336	341	346	351	355	360	356
105	351	355	360	365	370	375	380	385	390
110	375	380	385	390	396	401	406	412	417
115	401	406	412	417	422	428	433	439	445
120	428	433	439	445	450	456	462	468	474
125	456	462	468	474	480	486	492	498	504

Wiring Diagrams

Figure 2. 5TCC4048

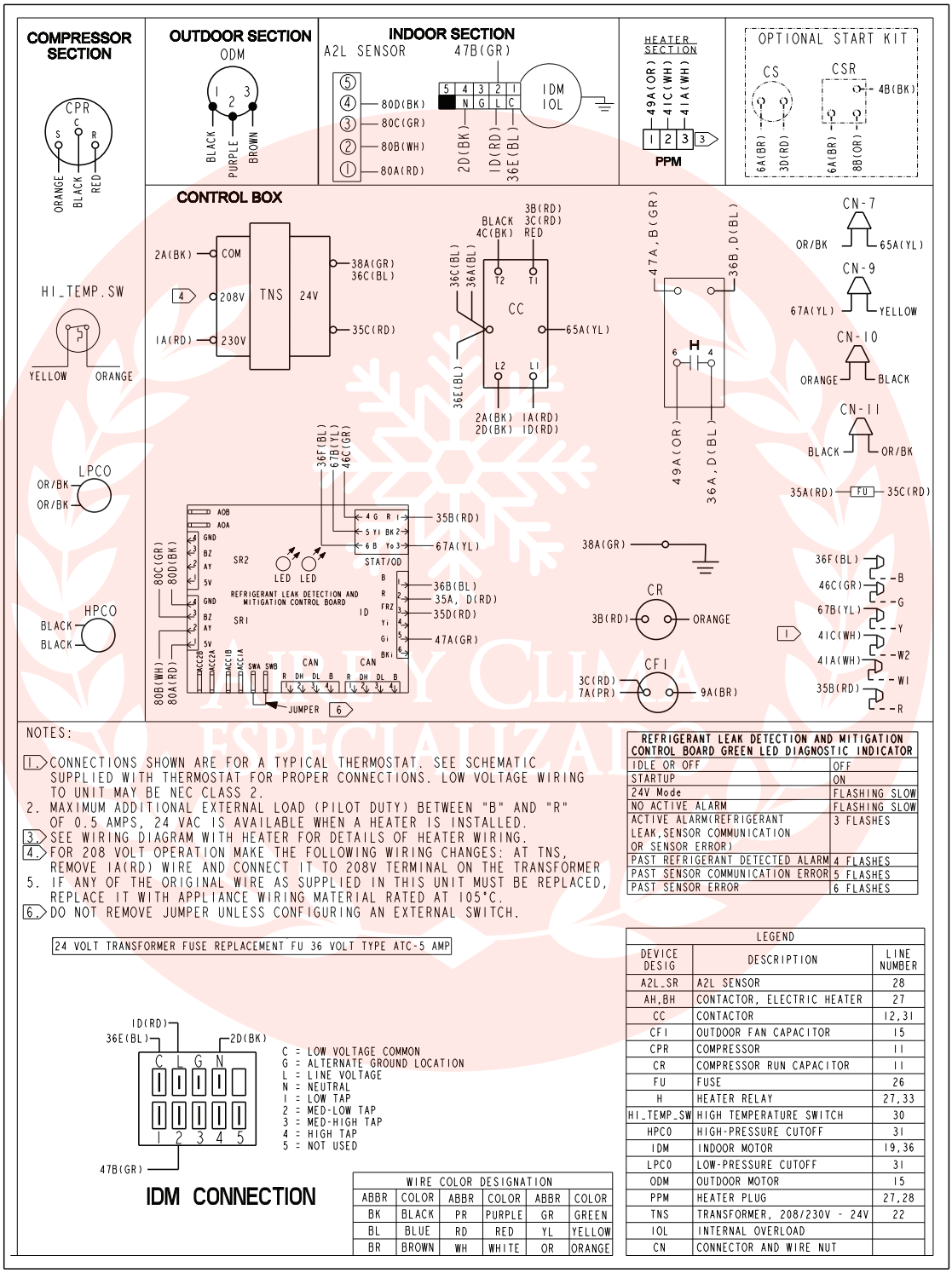

REFRIGERANT LEAK DETECTION AND MITIGATION CONTROL BOARD GREEN LED DIAGNOSTIC INDICATOR	
IDLE OR OFF	OFF
STARTUP	ON
24V Mode	FLASHING SLOW
NO ACTIVE ALARM	FLASHING SLOW
ACTIVE ALARM(REFRIGERANT LEAK,SENSOR COMMUNICATION OR SENSOR ERROR)	3 FLASHES
PAST REFRIGERANT DETECTED ALARM	4 FLASHES
PAST SENSOR COMMUNICATION ERROR	5 FLASHES
PAST SENSOR ERROR	6 FLASHES

LEGEND		
DEVICE DESIG	DESCRIPTION	LINE NUMBER
A2L_SR	A2L SENSOR	28
AH,BH	CONTACTOR, ELECTRIC HEATER	27
CC	CONTACTOR	12,31
CFI	OUTDOOR FAN CAPACITOR	15
CPR	COMPRESSOR	11
CR	COMPRESSOR RUN CAPACITOR	11
FU	FUSE	26
H	HEATER RELAY	27,33
HI_TEMP_SW	HIGH TEMPERATURE SWITCH	30
HPCO	HIGH-PRESSURE CUTOFF	31
IDM	INDOOR MOTOR	19,36
LPCO	LOW-PRESSURE CUTOFF	31
ODM	OUTDOOR MOTOR	15
PPM	HEATER PLUG	27,28
TNS	TRANSFORMER, 208/230V - 24V	22
IOL	INTERNAL OVERLOAD	
CN	CONNECTOR AND WIRE NUT	

WIRE COLOR DESIGNATION					
ABBR	COLOR	ABBR	COLOR	ABBR	COLOR
BK	BLACK	PR	PURPLE	GR	GREEN
BL	BLUE	RD	RED	YL	YELLOW
BR	BROWN	WH	WHITE	OR	ORANGE

Figure 3. 5TCC4048

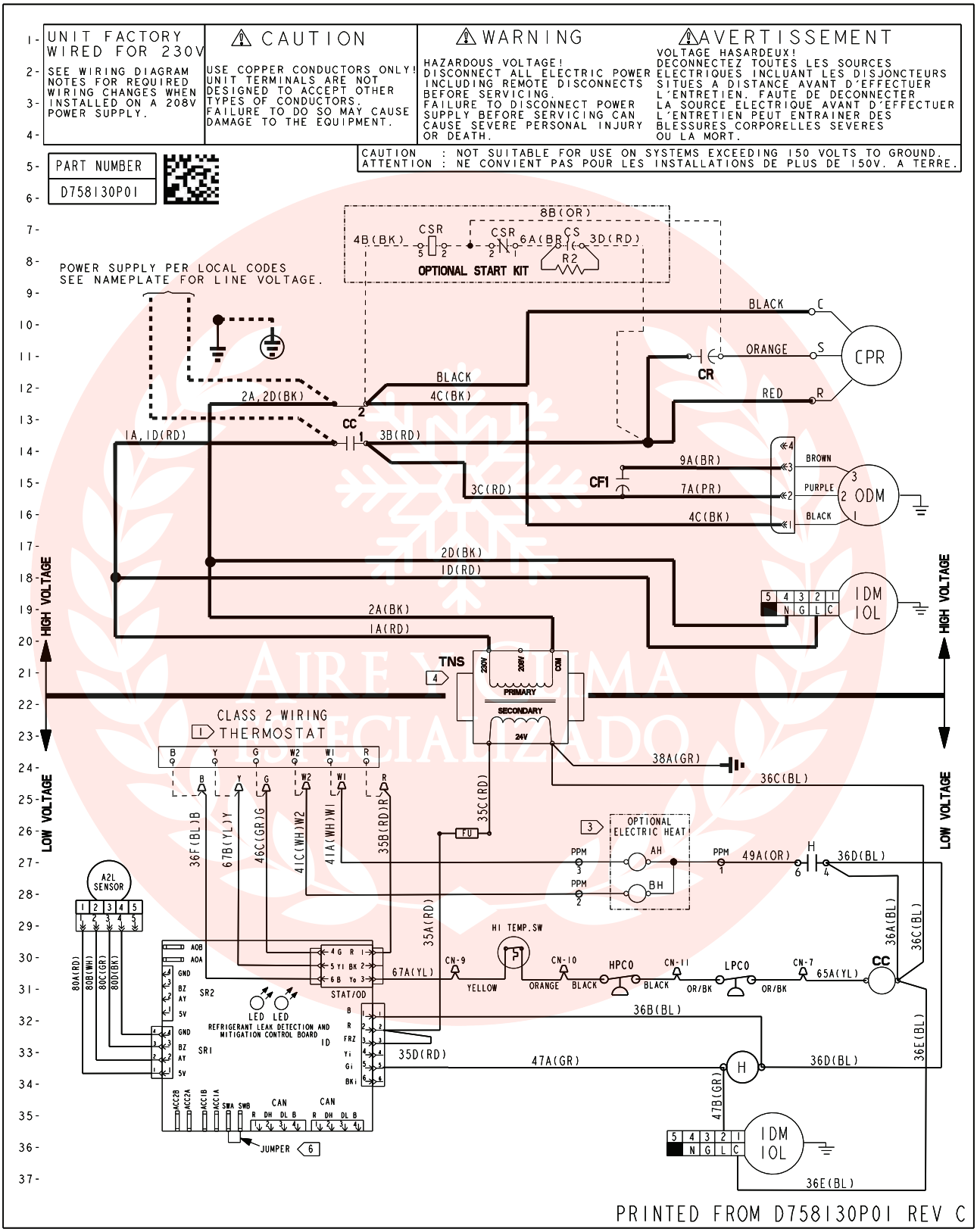

Refrigerant Circuits

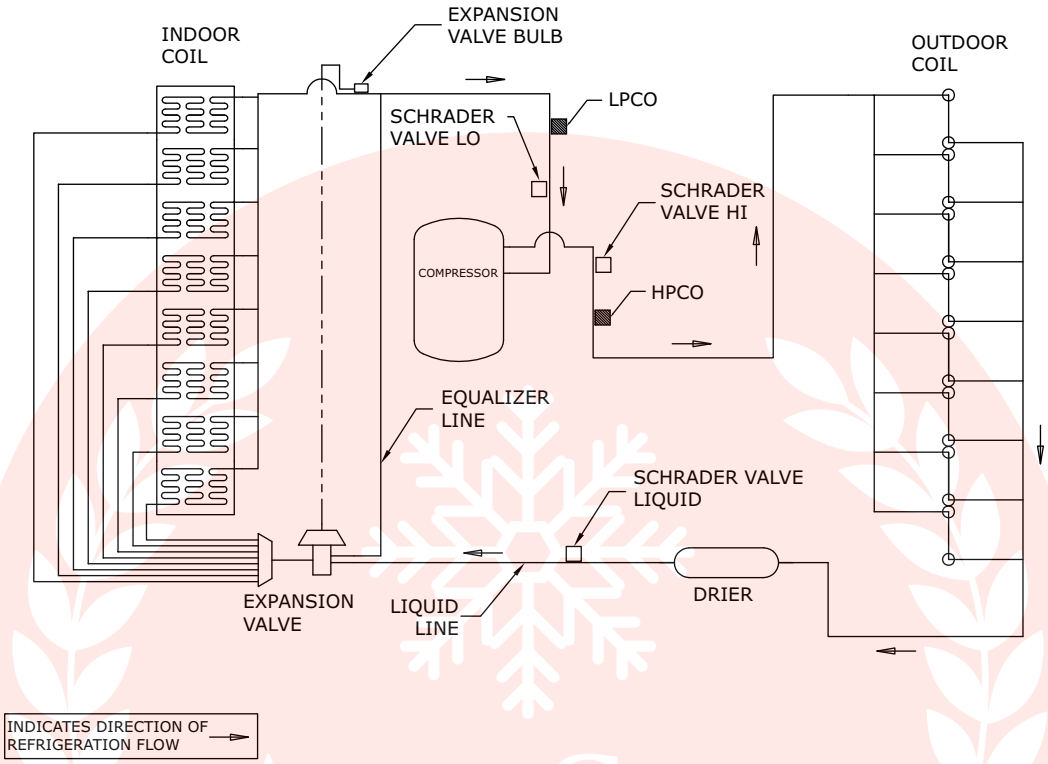

AIRE Y CLIMA ESPECIALIZADO

Troubleshooting Chart

P-PRIMARY CAUSES / S-SECONDARY CAUSES

SYSTEM FAULTS	Power Supply	High Voltage Wiring	Compr. IOL	Run Capacitor	Start capacitor	Start Relay	Contactor Contacts	Low Voltage Wiring	Control Transformer	Contactor Coil	Low Voltage Fuse	Stuck Compressor	Ineffecient Compressor	Refrigerant Undercharge	Refrigerant Overcharge	Excessive Evap. Load	Noncondensables	Restricted O.D. Airflow	O.D. Air Recirculation	TXV Stuck Open	Low Superheat	High Superheat	Restricted I.D. Airflow	Ref. Circuit Restrictions	Mitigation System
REFRIGERANT CIRCUIT																									
Liquid Pressure too High															P		S	P	S					S	
Liquid Pressure too Low													S	P						S		S		S	
Suction Pressure too High													S		P	P				S	S				
Suction Pressure too Low														S								S	P	S	
Liquid Refrigerant Floodback (TXV System)																				S	S		P		
I.D. Coil Frosting														P							S		P	S	
Compressor Runs Inadequate or No Cooling													S	P		P	S	S	S			S	P	S	
ELECTRICAL																									
Compressor & O.D. Fan Do Not Start	P	P					S	S	P	P	P														P
Compressor will not Start but O.D. Fan Runs		P	S	P	P	P						S													
O.D. Fan will Not Start		P		P																					
Compressor Hums but will Not Start		P		P	P	P	S					S													
Compressor Cycles on IOL		P	S	P	P	P	S					P	S	P	S	S	S	S	S			S		S	
I.D. Blower willnot Start	P	S						S	P		P														

MCB Code Table

Condition	Green LED	Amber LED
Idle or Off	Off	Off
Startup	On	On
No Active Alarm	Slow Flash	On
Active Alarm (Refrigerant Leak, Sensor Communication Error, or Sensor Error)	3 Flash	On
Past Refrigerant Detected Alarm	4 Flash	On
Past Sensor Communication Error	5 Flash	On
Past Sensor Error	6 Flash	On

Important Product Information

Packaged Unit Serial Number_____

Packaged Unit Model Number_____

Date of Installation_____

Dealer_____

Service Information

Call your installing dealer if the unit is inoperative. Before you call, always check the following to be sure service is required:

1. Be sure the main switch that supplies power to the unit is in the ON position.
2. Replace any burned-out fuses or reset circuit breakers.
3. Be sure the thermostat is properly set.

Service Phone _____

AIRE Y CLIMA
ESPECIALIZADO

Aire y Clima
Especializado

AIRE Y CLIMA
ESPECIALIZADO

AIRE Y CLIMA
ESPECIALIZADO

About Trane and American Standard Heating and Air Conditioning

Trane and American Standard create comfortable, energy efficient indoor environments for residential applications. For more information, please visit www.trane.com or www.americanstandardair.com.

AHRI CERTIFIED®
www.ahridirectory.org
Unitary Small AC
AHRI Standard 210/240
Certification applies only when the complete system is listed with AHRI.

c UL us LISTED

The AHRI Certified mark indicates company participation in the AHRI Certification program. For verification of individual certified products, go to ahridirectory.org.

The manufacturer has a policy of continuous data improvement and it reserves the right to change design and specifications without notice. We are committed to using environmentally conscious print practices.

5TCC4048A-SF-1A-EN 13 Sep 2024
Supersedes (New)

©2024