Product and Submittal Data

Single Packaged Cooling/Electric Heat Choice, Convertible, 2 to 5 Ton, R-454B

5TCC4024A1000A
5TCC4030A1000A
5TCC4036A1000A
5TCC4042A1000A
5TCC4048A1000A
5TCC4060A1000A

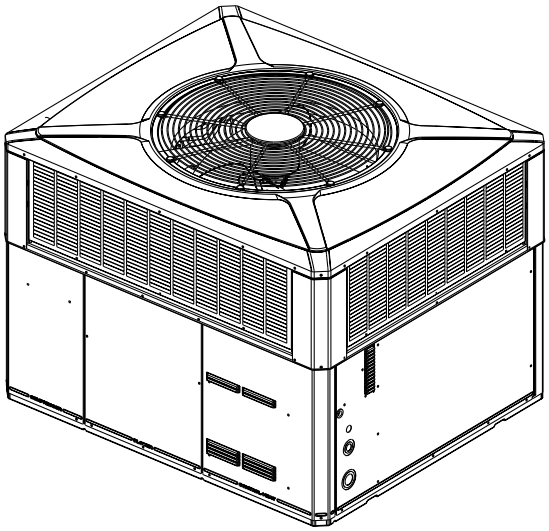

Note: *Graphics in this document are for representation only. Actual model may differ in appearance.*

September 2025

PKGR-PSD011B-EN

Introduction

Single Packaged Cooling Systems are easy and versatile to install.

Because cooling and heating functions are all contained in a single cabinet, Trane packaged air conditioner is easy to install and service. It can be flush mounted beside your home at ground level or placed on the roof for horizontal or downflow installation. When connected to an optional Trane thermostat control, and air distribution ducts, you have a highly efficient, total home comfort system.

Single Packaged Cooling Systems are unmatched in quality and reliability.

All major components on these products, including the compressor, have been designed and manufactured for maximum service. Every compressor is designed and manufactured to exacting specifications. Each design is life tested in extreme environments to ensure reliable and long lasting operation in normal applications. Each compressor has internal motor protection for added reliability.

Copyright

This document and the information in it are the property of Trane, and may not be used or reproduced in whole or in part without written permission. Trane reserves the right to revise this publication at any time, and to make changes to its content without obligation to notify any person of such revision or change.

Trademark

All trademarks referenced in this document are the trademarks of their respective owners.

Revision History

- Updated Optional equipment listing table.
- Updated Product specification table.
- Updated Wiring diagram images.
- Updated Supplementary electric heaters table.

ARTE Y CLIMA ESPECIALIZADO

Table of Contents

Optional Equipment Listing 4
Product Specification 6
Supplementary Electric Heaters 8
BAYSPEK - Single Power Entry Kit 10
Indoor Fan Performance (230v). 11
Wiring Diagrams 14
Full Perimeter Roof Mounting Curb 20
Optional Equipment — Economizer 22
Optional Equipment — Outside Air Damper 23
Optional Equipment — Filter Rack 24
Dimensional Data 25
Mechanical Specifications 28

AIRE Y CLIMA ESPECIALIZADO

Optional Equipment Listing

Table 1. Optional equipment listing

Hinged Filter Access Door (5TCC4024–036)[a]	BAYACCDOR1A [ ]
Hinged Filter Access Door (5TCC4042–060)[a]	BAYACCDOR2A [ ]
Roof Curb Full Perimeter (5TCC024–036)	BAYCURB050B [ ]
Roof Curb Full Perimeter (5TCC042–060)	BAYCURB051B [ ]
Roof Curb Utility Extension Kit (5TCC024–036)	BAYUTIL101B [ ]
Roof Curb Utility Extension Kit (5TCC042–060)	BAYUTIL101B [ ]
0–25% Manual Fresh Air Damper (5TCC4024–036)[b]	BAYOSAH001A [ ]
0–25% Manual Fresh Air Damper (5TCC4042–060)[b]	BAYOSAH002A [ ]
Motorized Fresh Air Damper (5TCC4024–036)[b]	BAYDMPR101A [ ]
Motorized Fresh Air Damper (5TCC4042–060)[b]	BAYDMPR102A [ ]
0–100% Mod Economizer w/Baro. Relief (5TCC4024–036)[b][c] [d]	BAYECON105A [ ]
0–100% Mod Economizer w/Baro. Relief (5TCC4042–060)[b][c][d]	BAYECON106A [ ]
0–100% Horizontal Economizer (5TCC4024–036)[b][c]	BAYECON205A [ ]
0–100% Horizontal Economizer (5TCC4042–060)[b][c]	BAYECON206A [ ]
Enthalpy Control for Economizer (Used with all BAYECON)	BAYEENTH001A [ ]
Remote Potentiometer (Used with all BAYECON)	BAYSTAT023 [ ]
1 to 2-in. Filter Frame (5TCC4024–036) (18 x 25 filter not included)	BAYFLTR101C [ ]
1to 2-in. Filter Frame (5TCC4042–060) (two 18 x 20 filters not included)	BAYFLTR201C [ ]
Head Pressure Control (Low Ambient Cool) (208/240v) Kit	BAYLOAM105A [ ]
Quick Start Kit (5TCC4)	BAYQSTK300B [ ]
Crankcase Heater Scroll (5TCC4024–036) (230v)	BAYCCHT103A [ ]
Crankcase Heater Scroll (5TCC4042–060) (230v)	BAYCCHT102A [ ]
Adapter Curb (5TCC4024–036) to BAYCURB030, 38	BAYADAP050A [ ]
Adapter Curb (5TCC4024–036) to BAYCURB033	BAYADAP051A [ ]
Adapter Curb (5TCC4042–060) to BAYCURB030, 38	BAYADAP052A [ ]
Adapter Curb (5TCC4042–060) to BAYCURB033	BAYADAP053A [ ]
Adapter Curb (5TCC4042–060) to BAYCURB034	BAYADAP054A [ ]
12-in. Duct Shroud Covers Horizontal (5TCC4024–060)	BAYCOVR112A [ ]
18-in. Duct Shroud Covers Horizontal (5TCC4024–060)	BAYCOVR118A [ ]
Extreme Condition Mounting Kit — All BAYCURB and BAYADAP	BAYEXMK001A [ ]
Extreme Condition Mounting Kit — All BAYUTIL	BAYEXMK002B [ ]
Extreme Condition Mounting Kit — All Slab Mounts	BAYEXMK003A [ ]
Lifting Lug Kit	BAYLIFT002B [ ]
Evaporator Defrost Control Kit - (all models)	BAYLOAM011A [ ]
Anti-Short cycle timer- (all models)	BAYASCT001 [ ]
Adaptor Kit for Installation of CleanEffects- (5TCC4024–036)	BAYACCEADP1B [ ]
Adaptor Kit for Installation of CleanEffects- (5TCC4042–060)	BAYACCEADP2B [ ]
Supplementary Heaters (1 Phase) * = T or W Only (Does not apply to Gas/Electric or Dual Fuel models)	
3.76/5.0 kW Heater (208/240v 1 Ph) (5*CC4024–060)	BAYHTRG105A [ ]
6.0/8.0 kW Heater (208/240v 1 Ph) (5*CC4024–060)	BAYHTRG108A [ ]

Table 1. Optional equipment listing (continued)

7.50/10.0 kW Heater (208/240v 1 Ph) (5*CC4024–060)	BAYHTRG110A [ ]
11.27/15.0 kW Heater (208/240v 1 Ph) (5*CC4030–060)	BAYHTRG115A [ ]
15.0/20.0 kW Heater (208/240v 1 Ph) (5*CC4048–060)	BAYHTRG120A [ ]
18.78/25.0 kW Heater (208/240V 1 Ph) (5*CC40060)	BAYHTRG125A [ ]
Single Power Entry Kit[e]	BAYSPEK060J [ ]
Single Power Entry Kit[e]	BAYSPEK062J [ ]
Single Power Entry Kit[e]	BAYSPEK063J [ ]

(a) BAYACCDOR1A requires BAYFLTR101C and BAYACCDOR2A requires BAYFLTR201C. They are not backward compatible to BAYFLTR101/201A.
(b) Must use internal filter frame when economizer or fresh air kit is used.
(c) Dry bulb control standard with economizer.
(d) Downflow only.
(e) Must be selected per unit and heater model.

AIRE Y CLIMA ESPECIALIZADO

Product Specification

Table 2. Models — 5TCC4024A, 5TCC4030A, 5TCC4036A, 5TCC4042A, 5TCC4048A, and 5TCC4060A

Model	**5TCC4024A**	**5TCC4030A**	**5TCC4036A**	**5TCC4042A**	**5TCC4048A**	**5TCC4060A**
Rated Volts/Ph/Hz	208–230/1/60					
Performance Cooling BTUH[a]	24000	28400	36800	40000	47500	58500
Indoor Airflow (CFM)	820	920	1190	1500	1670	1700
Power Input (kW)	1.98	2.43	3.12	3.53	4.30	5.08
EER2/SEER2 (BTU/Watt-Hr.)[b]	11.0/14.3	11.0/14.0	11.0/13.8	11.0/13.8	11.0/13.4	11.0/13.4
Sound Power Rating [dB(A)][c]	66.6	70	69.3	74.6	72.5	73.1
Power Conn. — V/Ph/Hz	208–230/1/60					
Min. Brch. Cir. Ampacity[d]	16	21	28	26	36	41
Fuse Size — Max. (amps)	25	30	40	40	50	60
Fuse Size — Recmd. (amps)	25	30	40	40	50	60
Compressor	Scroll					
Volts/Ph/Hz	208–230/1/60					
R.L. Amps — L.R. Amps	10.3 / 60.2	12.7 / 75.6	16.7 / 93.5	14.7 / 109.0	22.4 / 126	25.6 / 150.0
Outdoor Coil — Type	Spine-Fin					
Rows/F.P.I	2 / 24					
Face Area (sq. ft.)	13.32	13.32	15.49	15.63	20.54	22.99
Tube Size (in.)	3/8					
Indoor Coil — Type	MCHE					RTPF
Rows/F.P.I	2 / 16					4 / 15
Face Area (sq. ft.)	2.7	2.7	2.7	3.9	3.9	5.0
Tube Size (in.)	0.81	0.81	1.00	0.81	0.81	0.38
Refrigeration Control	Expansion Valve					
Drain Conn. Size (in.)	3/4 Female NPT					
Outdoor Fan — Type	Propeller					
Dia. (in.)	23.4			28.3		
Drive/No. Speeds	Direct / 1					
CFM @ 0.0 in. w.g[e]	2350	2800	3080	3400	3400	4800
Motor — HP/R.P.M	1/12 / 825	1/6 / 825	1/5 / 825	1/4 / 825	1/4 / 825	1/3 / 825
Volts/Ph/Hz	208–230/1/60					
F.L. Amps/L.R Amps	0.54 / 0.82	0.85 / 1.65	1.1 – 2.0	1.5 / 3.07	1.5 / 3.07	1.7 / 3.5
Indoor Fan — Type	Constant Torque ECM					
Dia. x Width (in.)	10.62 X 10.62					11.87 X 10.68
Drive/No. Speeds	Direct / 4					
CFM @ 0.0 in. w.g[f]	**See Indoor Fan Performance Table**					
Motor — HP / R.P.M.	1/3 / 1050	1/2 / 1050	3/4 / 1050	3/4 / 1050	3/4 / 1050	1 / 1050

AIRE Y CLIMA ESPECIALIZADO

Table 2. Models — 5TCC4024A, 5TCC4030A, 5TCC4036A, 5TCC4042A, 5TCC4048A, and 5TCC4060A (continued)

Model	5TCC4024A	5TCC4030A	5TCC4036A	5TCC4042A	5TCC4048A	5TCC4060A
Volts/Ph/Hz	208–230/1/60					
F.L. Amps	2.7	4.1	6.0	6.0	6.0	7.4
Filter / Furnished	No					
Type Recommended	Throwaway					
Recmd. Face Area (sq. ft)[g]	4.0			5.3		
Refrigerant	R-454B					
Charge (lbs.)	4.4	7.0	7.2	7.3	6.6	9.8
Charging Specifications						
Subcooling	12˚F	10˚F	12˚F	12˚F	10˚F	13˚F
Dimensions	**H X W X L**					
Crated (in.)	46 X 45 X 52	48 X 45 X 52	48 X 45 X 52	46 X 47 X 62	50 X 47 X 61	50 X 47 X 61
Weight						
Shipping (lbs.) /Net (lbs.)	436 / 362	454 / 380	458 / 384	564 / 460	563 / 459	588 / 484

(a) Rated in accordance with AHRI Standard 210/240.
(b) Rated in accordance with D.O.E. test procedure.
(c) Sound Power values are not adjusted for AHRI 270–95 tonal corrections.
(d) Calculated in accordance with currently prevailing Nat'l Electrical Code.
(e) Standard Air — Dry Coil — Outdoor.
(f) Standard Air — Dry Coil — Indoor.
(g) Filters must be installed in return air stream. Square footages listed are based on 300 f.p.m. face velocity. If permanent filters are used size per manufacturer's recommendation with a clean resistance of 0.05-in. W.C.

AIRE Y CLIMA ESPECIALIZADO

Supplementary Electric Heaters

Table 3. Supplementary electric heaters

Unit Model	Electric Heater Model	Rated Voltage	Phase	Amps	Heater Capacity		No. Of Stages	kW/Stage		MCA	Max. Fuse or HACR CKT BKR Size [a]	Canada Only Max. CKT BKR Size [b]
					kW	BTUH		1	2			
&TCC&024-060‡1 &WCC&024-060‡1 &TCY&024-060‡1 &WCY&024-060‡1 &WCZ&024-060‡1 A5PA&024-060‡1 A5PH&024-060‡1	BAYHTRG105	208/240	1	18/21	3.76/5.0	12800/ 17100	1	3.76/5.0	—	23/26	25/30	25/30
&TCC&024-060‡1 &WCC&024-060‡1 &TCY&024-060‡1 &WCY&024-060‡1 &WCZ&024-060‡1 A5PA&024-060‡1 A5PH&024-060‡1	BAYHTRG108	208/240	1	29/33	6.0/8.0	20500/ 27300	1	6.0/8.0	—	36/41	40/45	40/45
&TCC&024-060‡1 &WCC&024-060‡1 &TCY&024-060‡1 &WCY&024-060‡1 &WCZ&024-060‡1 A5PA&024-060‡1 A5PH&024-060‡1	BAYHTRG110	208/240	1	36/42	7.5/10.0	25600/ 34100	1	7.5/10.0	—	45/52	45/60	45/60
&TCC&030-060‡1 &WCC&030-060‡1 &TCY&030-060‡1 &WCY&030-060‡1 &WCZ&030-060‡1 A5PA&030-060‡1 A5PH&030-060‡1	BAYHTRG115	208/240	1	54/63	11.27/ 15.0	38500/ 51200	2	7.5/10.0	3.76/5.0	68/78	70/80	70/80
&TCC&048-060‡1 &WCC&048-060‡1 &TCY&042-060‡1 &WCY&042-060‡1 &WCZ&048-060‡1 A5PA&048-060‡1 A5PH&048-060‡1	BAYHTRG120#	208/240	1	72/83	15.0/20.0	51200/ 68300	2	7.5/10.0	7.5/10.0	90/104	90/110	90/110
&TCC&060‡1 &WCC&060‡1 &TCY&042-060‡1 &WCY&042-060‡1 &WCZ&048-060‡1 A5PA&060‡1 A5PH&060‡1	BAYHTRG125#	208/240	1	90/104	18.78/ 25.0	64100/ 85300	2	11.26/ 15.0	7.5/10.0	113/130	125/150	125/150
&W/TCY4036-060‡3 &WCZ&036-060‡3	BAYHTRV305	208/240	3	10/ 12	3.76/ 5.0	12800/ 17100	1	3.76/5.0	—	13/ 15	15/15	15/15
&W/TCY4036-060‡3 &WCZ&036-060‡3	BAYHTRV308	208/240	3	17/ 19	6.0/ 8.0	20500/ 27300	1	6.0/ 8.0	—	21/ 24	25/25	25/25
&W/TCY4036-060‡3 &WCZ&036-060‡3	BAYHTRV310	208/240	3	21/ 24	7.5/ 10.0	25600/ 34100	1	7.5/10.0	—	26/ 30	30/30	30/30
&W/TCY4036-060‡3 &WCZ&036-060‡3	BAYHTRV315	208/240	3	31/ 36	11.27/ 15.0	38500/ 51200	2	7.5/10.0	3.76/ 5.0	39/ 45	40/45	40/45
&W/TCY4048-060‡3 &WCZ&048-060‡3	BAYHTRV320	208/240	3	42/ 48	15.0/ 20.0	51200/ 68300	2	7.5/10.0	7.5/ 10.0	52/ 60	60/60	60/60
&W/TCY4048-060‡3 &WCZ&048-060‡3	BAYHTRV325#	208/240	3	52/ 60	18.78/ 25.0	64100/ 85300	2	11.26/ 15.0	7.5/ 10.0	65/ 75	70/80	70/80

AIRE Y CLIMA ESPECIALIZADO

Table 3. Supplementary electric heaters (continued)

Unit Model	Electric Heater Model	Rated Voltage	Phase	Amps	Heater Capacity		No. Of Stages	kW/Stage		MCA	Max. Fuse or HACR CKT BKR Size [a]	Canada Only Max. CKT BKR Size [b]
					kW	BTUH		1	2			
&WCZ&036-060‡4	BAYHTRV405	480	3	6	5.0	17100	1	5.0	—	8	15	15
&WCZ&036-060‡4	BAYHTRV408	480	3	10	8.0	27300	1	8.0	—	13	15	15
&WCZ&036-060‡4	BAYHTRV410	480	3	12	10.0	34100	1	10.0	—	15	15	15
&WCZ&036-060‡4	BAYHTRV415	480	3	18	15.0	51200	2	10.0	5.0	23	25	25
&WCZ&048-060‡4	BAYHTRV420	480	3	24	20.0	68300	2	10.0	10.0	30	30	30
&WCC&036-060‡3	BAYHTRG305	208/240	3	10/12	3.76/5.0	12800/ 17100	1	3.76/5.0	—	13/15	15/15	15/15
&WCC&036-060‡3	BAYHTRG308	208/240	3	17/19	6.0/ 8.0	20500/ 27300	1	6.0/ 8.0	—	21/24	25/25	25/25
&WCC&036-060‡3	BAYHTRG310	208/240	3	21/24	7.5/10.0	25600/ 34100	1	7.5/10.0	—	26/30	30/30	30/30
&WCC&036-060‡3	BAYHTRG315	208/240	3	31/36	11.27/ 15.0	38500/ 51200	2	7.5/10.0	3.76/5.0	39/45	40/45	40/45
&WCC&048-060‡3	BAYHTRG320	208/240	3	42/48	15.0/20.0	51200/ 68300	2	7.5/10.0	7.5/10.0	52/60	60/60	60/60
&WCC&048-060‡3	BAYHTRG325#	208/240	3	52/60	18.78/ 25.0	64100/ 85300	2	11.26/ 15.0	7.5/10.0	65/75	70/80	70/80
&WCC&036-060‡4	BAYHTRG405	480	3	6	5.0	17100	1	5.0	—	8	15	15
&WCC&036-060‡4	BAYHTRG408	480	3	10	8.0	27300	1	8.0	—	13	15	15
&WCC&036-060‡4	BAYHTRG410	480	3	12	10.0	34100	1	10.0	—	15	15	15
&WCC&036-060‡4	BAYHTRG415	480	3	18	15.0	51200	2	10.0	5.0	23	25	25
&WCC&048-060‡4	BAYHTRG420	480	3	24	20.0	68300	2	10.0	10.0	30	30	30

Notes:

1. All values are for the electric heater only.
2. Any power supply and circuits must be wired and protected in accordance with local electrical codes.
3. The values listed in the above table are for the electric heater only.
4. Field wiring must be rated at least 75° C.
5. * indicates an alpha character.
6. ‡ indicates model letter.
7. # Heater uses fuses.
8. & indicates a digit.

[a] The HACR circuit breaker is for U.S.A. installations only.
[b] For Canada installation reference only.

AIRE Y CLIMA ESPECIALIZADO

BAYSPEK - Single Power Entry Kit

Table 4. Single circuit power ampacity and over current protection

Unit Model	Single Power Entry Kit	Heater Model	Min. CKT Amp	Max. Over-current Device
5TCC4024A	BAYSPEK60	BAYHTRG105	29	30
		BAYHTRG108	45	45
		BAYHTRG110	56	60
5TCC4030A	BAYSPEK60	BAYHTRG105	31	35
		BAYHTRG108	47	50
		BAYHTRG110	57	60
	BAYSPEK63	BAYHTRG115	83	90
5TCC4036A	BAYSPEK60	BAYHTRG105	34	40
		BAYHTRG108	49	50
		BAYHTRG110	60	60
	BAYSPEK63	BAYHTRG115	86	90
5TCC4042A	BAYSPEK60	BAYHTRG105	34	40
		BAYHTRG108	49	50
		BAYHTRG110	60	60
	BAYSPEK63	BAYHTRG115	86	90
5TCC4048A	BAYSPEK60	BAYHTRG105	36	50
		BAYHTRG108	49	50
		BAYHTRG110	60	60
	BAYSPEK63	BAYHTRG115	86	90
		BAYHTRG120	112	125
5TCC4060A	BAYSPEK60	BAYHTRG105	41	60
		BAYHTRG108	51	60
	BAYSPEK62	BAYHTRG110	61	70
	BAYSPEK63	BAYHTRG115	87	90
		BAYHTRG120	113	125

AIRE ESCLIMA ESPECIALIZADO

Indoor Fan Performance (230v)

Table 5. Airflow - model 5TCC4024A

External Static Pressure (in.WG) Horizontal Airflow [Cooling Down Airflow]												
Motor Speed		**0.0**	**0.1**	**0.2**	**0.3**	**0.4**	**0.5**	**0.6**	**0.7**	**0.8**	**0.9**	**1**
LOW	Watts	84 [85]	91 [92]	98 [98]	105 [106]	—	—	—	—	—	—	—
	CFM	873 [865]	811 [803]	754 [746]	690 [683]	—	—	—	—	—	—	—
MED-LOW [a]	Watts	—	114 [115]	121 [122]	128 [129]	138 [138]	—	—	—	—	—	—
	CFM	—	900 [891]	846 [838]	794 [786]	729 [722]	—	—	—	—	—	—
MED-HIGH	Watts	—	—	—	158 [159]	167 [167]	175 [176]	185 [186]	—	—	—	—
	CFM	—	—	—	890 [881]	836 [828]	777 [769]	707 [700]	—	—	—	—
HIGH	Watts	—	—	—	—	— [249]	256 [258]	264 [266]	274 [276]	282 [284]	—	—
	CFM	—	—	—	—	— [899]	863 [854]	818 [810]	773 [765]	731 [724]	—	—

Note: Airflow must not exceed 900 CFM due to condensate blowoff.

[a] Factory Default Setting.

Table 6. Airflow - model 5TCC4030A

External Static Pressure (in.WG) Horizontal Airflow [Cooling Down Airflow]												
Motor Speed		**0.0**	**0.1**	**0.2**	**0.3**	**0.4**	**0.5**	**0.6**	**0.7**	**0.8**	**0.9**	**1**
LOW	Watts	126 [126]	134 [135]	142 [143]	150 [150]	158 [158]	—	—	—	—	—	—
	CFM	1051 [1041]	994 [984]	939 [930]	889 [880]	840 [831]	—	—	—	—	—	—
MED-LOW [a]	Watts	—	175 [176]	184 [185]	192 [193]	200 [201]	209 [210]	219 [220]	—	—	—	—
	CFM	—	1107 [1096]	1054 [1044]	1009 [999]	965 [956]	919 [910]	862 [853]	—	—	—	—
MED-HIGH	Watts	—	—	239 [240]	247 [248]	256 [258]	267 [269]	274 [276]	282 [284]	—	—	—
	CFM	—	—	1108 [1097]	1070 [1059]	1027 [1017]	975 [965]	920 [911]	875 [866]	—	—	—
HIGH	Watts	—	—	—	—	259 [260]	268 [270]	278 [279]	289 [290]	—	—	—
	CFM	—	—	—	—	1099 [1088]	1059 [1048]	1017 [1007]	968 [959]	—	—	—

Note: Airflow must not exceed 1125 CFM due to condensate blowoff.

[a] Factory Default Setting.

Indoor Fan Performance (230v)

Table 7. Airflow - model 5TCC4036A

External Static Pressure (in.WG) Horizontal Airflow [Cooling Down Airflow]												
Motor Speed		**0.0**	**0.1**	**0.2**	**0.3**	**0.4**	**0.5**	**0.6**	**0.7**	**0.8**	**0.9**	**1**
LOW	Watts	247 [248]	258 [260]	267 [269]	277 [279]	287 [289]	—	—	—	—	—	—
	CFM	1192 [1180]	1160 [1148]	1126 [1115]	1091 [1080]	1052 [1041]	—	—	—	—	—	—
MED-LOW (a)	Watts	—	352 [354]	361 [363]	372 [374]	382 [384]	392 [394]	404 [406]	416 [418]	—	—	—
	CFM	—	1272 [1259]	1243 [1231]	1214 [1202]	1186 [1174]	1154 [1142]	1116 [1105]	1072 [1061]	—	—	—
MED-HIGH	Watts	—	410 [410]	419 [419]	427 [427]	437 [437]	447 [447]	423 [423]	—	—	—	—
	CFM	—	1326 [1320]	1300 [1294]	1271 [1263]	1241 [1234]	1201 [1196]	1107 [1102]	—	—	—	—
HIGH	Watts	—	—	—	—	—	516 [519]	527 [530]	539 [542]	552 [555]	566 [569]	575 [578]
	CFM	—	—	—	—	—	1326 [1299]	1296 [1270]	1263 [1238]	1225 [1201]	1183 [1159]	1150 [1127]

Note: Airflow must not exceed 1350 CFM due to condensate blowoff.

(a) Factory Default Setting.

Table 8. Airflow - model 5TCC4042A

External Static Pressure (in.WG) Horizontal Airflow [Cooling Down Airflow]												
Motor Speed		**0.0**	**0.1**	**0.2**	**0.3**	**0.4**	**0.5**	**0.6**	**0.7**	**0.8**	**0.9**	**1**
LOW	Watts	224 [228]	233 [238]	242 [247]	252 [257]	262 [267]	—	—	—	—	—	—
	CFM	1358 [1345]	1393 [1379]	1348 [1334]	1296 [1283]	1253 [1241]	—	—	—	—	—	—
MED-LOW (a)	Watts	306 [312]	316 [322]	327 [333]	337 [344]	348 [354]	359 [366]	369 [377]	382 [389]	395 [403]	—	—
	CFM	1521 [1506]	1490 [1475]	1448 [1433]	1391 [1377]	1362 [1348]	1338 [1325]	1315 [1302]	1307 [1293]	1254 [1241]	—	—
MED-HIGH	Watts	—	—	—	—	455 [464]	467 [477]	477 [487]	490 [499]	503 [513]	513 [523]	—
	CFM	—	—	—	—	1529 [1514]	1491 [1476]	1467 [1453]	1425 [1411]	1385 [1371]	1345 [1331]	—
HIGH	Watts	—	—	—	—	490 [499]	502 [511]	514 [523]	527 [536]	540 [550]	554 [564]	568 [578]
	CFM	—	—	—	—	1533 [1518]	1505 [1490]	1476 [1461]	1447 [1433]	1415 [1401]	1383 [1369]	1347 [1334]

Note: Airflow must not exceed 1575 CFM due to condensate blowoff.

(a) Factory Default Setting.

Table 9. Airflow - model 5TCC4048A

External Static Pressure (in.WG) Horizontal Airflow [Cooling Down Airflow]												
Motor Speed		0.0	0.1	0.2	0.3	0.4	0.5	0.6	0.7	0.8	0.9	1
LOW	Watts	302 [308]	313 [320]	324 [330]	332 [339]	346 [352]	—	—	—	—	—	—
	CFM	1583 [1567]	1542 [1526]	1502 [1487]	1460 [1445]	1415 [1401]	—	—	—	—	—	—
MED-LOW (a)	Watts	414 [422]	426 [434]	436 [444]	448 [457]	459 [468]	471 [480]	483 [493]	495 [505]	510 [520]	—	—
	CFM	1763 [1745]	1723 [1706]	1689 [1672]	1648 [1632]	1609 [1593]	1568 [1552]	1527 [1512]	1488 [1473]	1447 [1433]	—	—
MED-HIGH	Watts	—	577 [589]	591 [603]	604 [616]	617 [629]	631 [644]	643 [656]	655 [668]	599 [611]	—	—
	CFM	—	1786 [1768]	1757 [1739]	1729 [1712]	1700 [1683]	1675 [1658]	1648 [1632]	1624 [1608]	1504 [1489]	—	—
HIGH	Watts	—	—	—	—	—	613 [625]	631 [644]	643 [656]	647 [660]	611 [623]	—
	CFM	—	—	—	—	—	1769 [1751]	1728 [1711]	1688 [1671]	1652 [1635]	1545 [1530]	—

Note: Airflow must not exceed 1800 CFM due to condensate blowoff.

(a) Factory Default Setting.

Table 10. Airflow - model 5TCC4060A

External Static Pressure (in.WG) Horizontal Airflow [Cooling Down Airflow]												
Motor Speed		0.0	0.1	0.2	0.3	0.4	0.5	0.6	0.7	0.8	0.9	1
LOW	Watts	515 [524]	523 [533]	533 [545]	544 [558]	—	—	—	—	—	—	—
	CFM	1857 [1831]	1831 [1802]	1800 [1765]	1766 [1728]	—	—	—	—	—	—	—
MED-LOW (a)	Watts	594 [611]	609 [627]	624 [642]	639 [658]	653 [672]	667 [686]	681 [701]	695 [715]	709 [730]	—	—
	CFM	2031 [2003]	2003 [1975]	1974 [1946]	1940 [1913]	1907 [1880]	1874 [1848]	1837 [1811]	1805 [1780]	1771 [1746]	—	—
MED-HIGH	Watts	749 [770]	759 [781]	769 [790]	779 [804]	788 [819]	803 [832]	816 [845]	830 [858]	845 [872]	860 [887]	—
	CFM	2083 [2054]	2058 [2030]	2032 [2010]	2003 [1976]	1974 [1946]	1943 [1911]	1911 [1879]	1877 [1848]	1843 [1817]	1807 [1781]	—
HIGH	Watts	900 [940]	910 [936]	921 [937]	932 [948]	941 [962]	956 [975]	969 [990]	983 [992]	997 [987]	1010 [985]	—
	CFM	2201 [2201]	2177 [2151]	2152 [2120]	2127 [2095]	2105 [2066]	2071 [2033]	2041 [1999]	2009 [1937]	1975 [1921]	1940 [1871]	—

Note: Airflow must not exceed 2250 CFM due to condensate blowoff.

(a) Factory Default Setting.

Wiring Diagrams

Figure 1. 5TCC4024–42

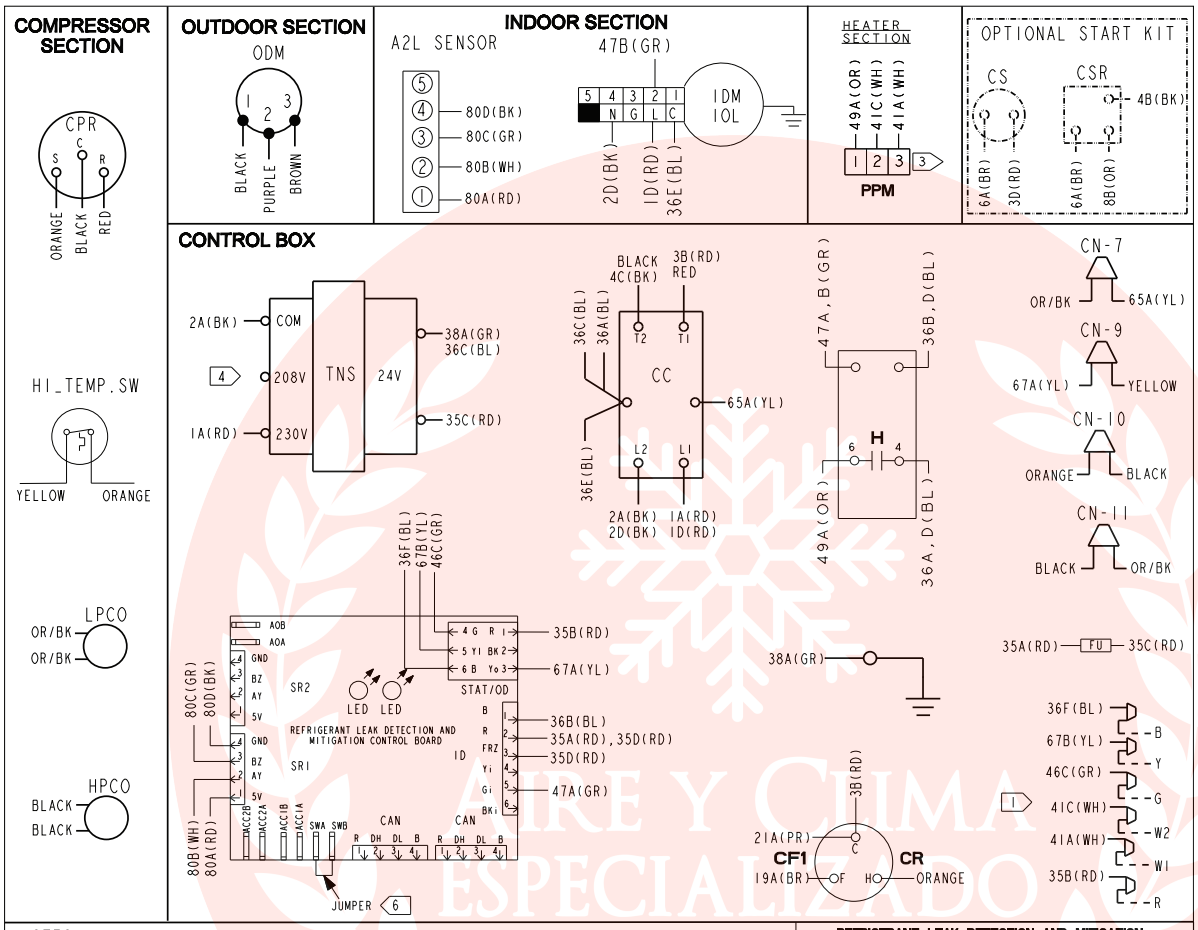

NOTES:

1. CONNECTIONS SHOWN ARE FOR A TYPICAL THERMOSTAT. SEE SCHEMATIC SUPPLIED WITH THERMOSTAT FOR PROPER CONNECTIONS. LOW VOLTAGE WIRING TO UNIT MAY BE NEC CLASS 2.
2. MAXIMUM ADDITIONAL EXTERNAL LOAD (PILOT DUTY) BETWEEN "B" AND "R" OF 0.5 AMPS, 24 VAC IS AVAILABLE WHEN A HEATER IS INSTALLED.
3. SEE WIRING DIAGRAM WITH HEATER FOR DETAILS OF HEATER WIRING.
4. FOR 208 VOLT OPERATION MAKE THE FOLLOWING WIRING CHANGES: AT TNS, REMOVE 1A(RD) WIRE AND CONNECT IT TO 208V TERMINAL ON THE TRANSFORMER
5. IF ANY OF THE ORIGINAL WIRE AS SUPPLIED IN THIS UNIT MUST BE REPLACED, REPLACE IT WITH APPLIANCE WIRING MATERIAL RATED AT 105°C.
6. DO NOT REMOVE JUMPER UNLESS CONFIGURING AN EXTERNAL SWITCH.

24 VOLT TRANSFORMER FUSE REPLACEMENT FU 36 VOLT TYPE ATC-5 AMP

REFRIGERANT LEAK DETECTION AND MITIGATION CONTROL BOARD GREEN LED DIAGNOSTIC INDICATOR	
OFF	NO POWER/OFF
ON	STARTUP
SLOW FLASH	NORMAL OPERATION
2 FLASH	ACTIVE ALARM - SENSOR COMMUNICATION ERROR
3 FLASH	ACTIVE ALARM - REFRIGERANT LEAK OR SENSOR FAILURE
4 FLASH	PAST REFRIGERANT DETECTED ALARM
5,6 OR 7 FLASH	PAST SENSOR COMMUNICATION OR SENSOR ERROR

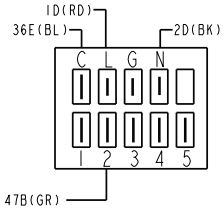

C = LOW VOLTAGE COMMON
G = ALTERNATE GROUND LOCATION
L = LINE VOLTAGE
N = NEUTRAL
1 = LOW TAP
2 = MED-LOW TAP
3 = MED-HIGH TAP
4 = HIGH TAP
5 = NOT USED

IDM CONNECTION

WIRE COLOR DESIGNATION					
ABBR	COLOR	ABBR	COLOR	ABBR	COLOR
BK	BLACK	PR	PURPLE	GR	GREEN
BL	BLUE	RD	RED	YL	YELLOW
BR	BROWN	WH	WHITE	OR	ORANGE

LEGEND		
DEVICE DESIG	DESCRIPTION	LINE NUMBER
A2L_SR	A2L SENSOR	28
AH,BH	CONTACTOR, ELECTRIC HEATER	27
CC	CONTACTOR	13,30
CF1	OUTDOOR FAN CAPACITOR	12
CPR	COMPRESSOR	11
CR	COMPRESSOR RUN CAPACITOR	12
FU	FUSE	25
H	HEATER RELAY	27,33
HI-TEMP-SW	HIGH TEMPERATURE SWITCH	29
HPCO	HIGH-PRESSURE CUTOFF	30
IDM	INDOOR MOTOR	18,36
LPCO	LOW-PRESSURE CUTOFF	30
ODM	OUTDOOR MOTOR	15
PPM	HEATER PLUG	27,28
TNS	TRANSFORMER, 208/230V - 24V	22
IOL	INTERNAL OVERLOAD	
CN	CONNECTOR AND WIRE NUT	

AIRE Y CLIMA ESPECIALIZADO

Figure 2. 5TCC4024–42

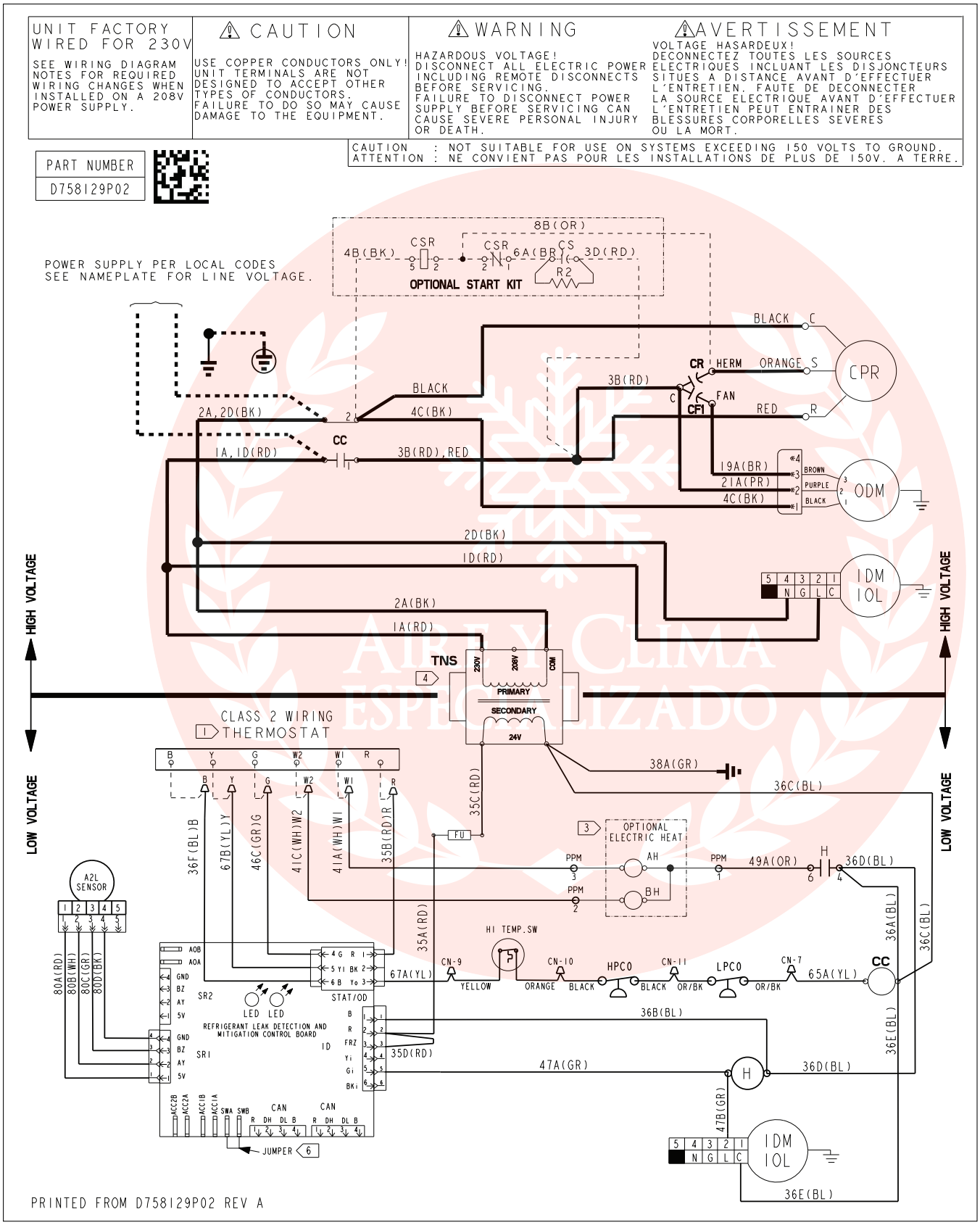

Figure 3. 5TCC4048

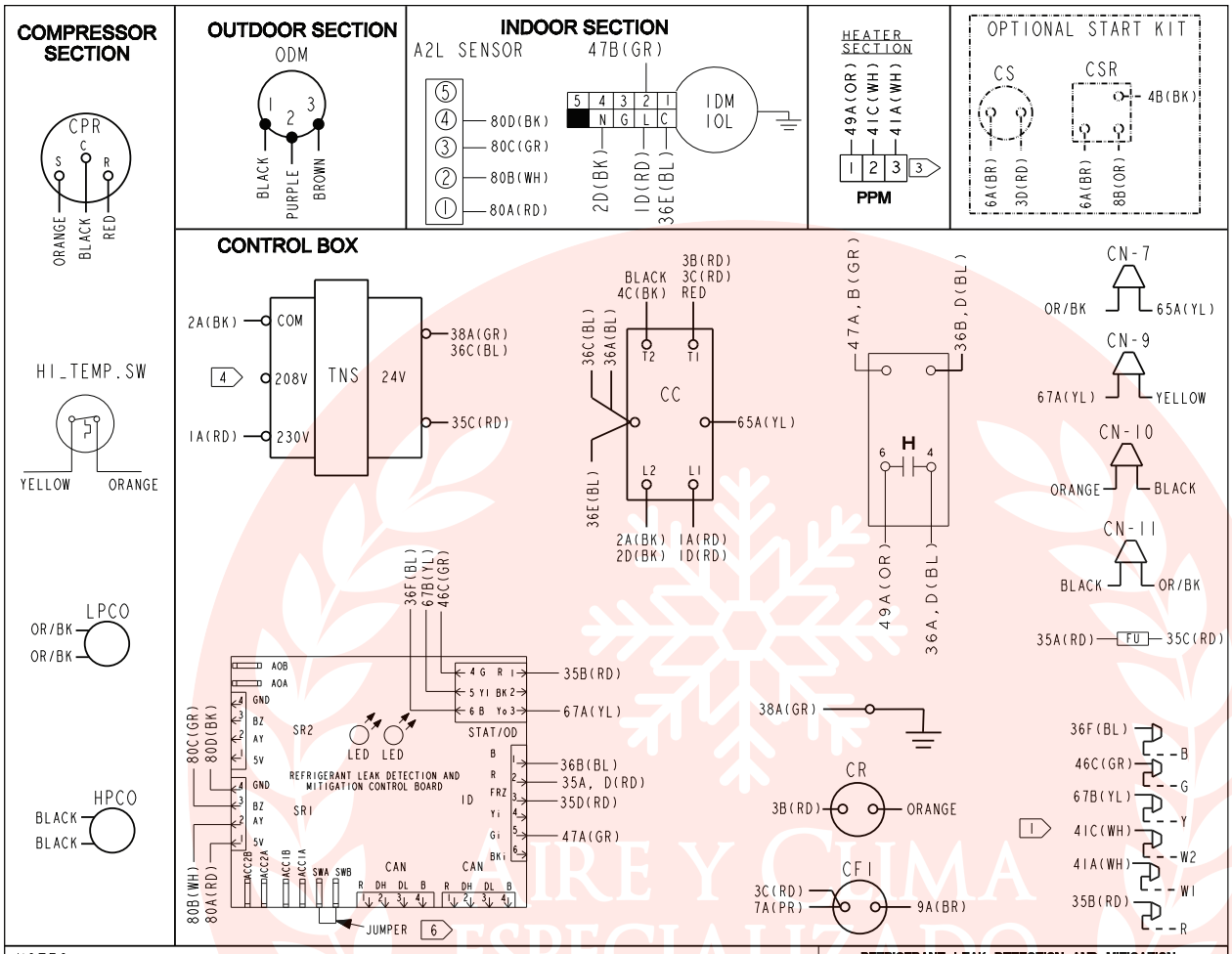

NOTES:

1. CONNECTIONS SHOWN ARE FOR A TYPICAL THERMOSTAT. SEE SCHEMATIC SUPPLIED WITH THERMOSTAT FOR PROPER CONNECTIONS. LOW VOLTAGE WIRING TO UNIT MAY BE NEC CLASS 2.
2. MAXIMUM ADDITIONAL EXTERNAL LOAD (PILOT DUTY) BETWEEN "B" AND "R" OF 0.5 AMPS, 24 VAC IS AVAILABLE WHEN A HEATER IS INSTALLED.
3. SEE WIRING DIAGRAM WITH HEATER FOR DETAILS OF HEATER WIRING.
4. FOR 208 VOLT OPERATION MAKE THE FOLLOWING WIRING CHANGES: AT TNS, REMOVE 1A(RD) WIRE AND CONNECT IT TO 208V TERMINAL ON THE TRANSFORMER
5. IF ANY OF THE ORIGINAL WIRE AS SUPPLIED IN THIS UNIT MUST BE REPLACED, REPLACE IT WITH APPLIANCE WIRING MATERIAL RATED AT 105°C.
6. DO NOT REMOVE JUMPER UNLESS CONFIGURING AN EXTERNAL SWITCH.

24 VOLT TRANSFORMER FUSE REPLACEMENT FU 36 VOLT TYPE ATC-5 AMP

REFRIGERANT LEAK DETECTION AND MITIGATION CONTROL BOARD GREEN LED DIAGNOSTIC INDICATOR	
OFF	NO POWER/OFF
ON	STARTUP
SLOW FLASH	NORMAL OPERATION
2 FLASH	ACTIVE ALARM - SENSOR COMMUNICATION ERROR
3 FLASH	ACTIVE ALARM - REFRIGERANT LEAK OR SENSOR FAILURE
4 FLASH	PAST REFRIGERANT DETECTED ALARM
5,6 OR 7 FLASH	PAST SENSOR COMMUNICATION OR SENSOR ERROR

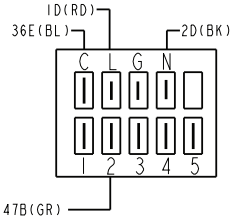

C = LOW VOLTAGE COMMON
G = ALTERNATE GROUND LOCATION
L = LINE VOLTAGE
N = NEUTRAL
1 = LOW TAP
2 = MED-LOW TAP
3 = MED-HIGH TAP
4 = HIGH TAP
5 = NOT USED

IDM CONNECTION

WIRE COLOR DESIGNATION					
ABBR	COLOR	ABBR	COLOR	ABBR	COLOR
BK	BLACK	PR	PURPLE	GR	GREEN
BL	BLUE	RD	RED	YL	YELLOW
BR	BROWN	WH	WHITE	OR	ORANGE

LEGEND		
DEVICE DESIG	DESCRIPTION	LINE NUMBER
A2L_SR	A2L SENSOR	28
AH,BH	CONTACTOR, ELECTRIC HEATER	27
CC	CONTACTOR	12,31
CFI	OUTDOOR FAN CAPACITOR	15
CPR	COMPRESSOR	11
CR	COMPRESSOR RUN CAPACITOR	11
FU	FUSE	26
H	HEATER RELAY	27,33
HI_TEMP_SW	HIGH TEMPERATURE SWITCH	30
HPCO	HIGH-PRESSURE CUTOFF	31
IDM	INDOOR MOTOR	19,36
LPCO	LOW-PRESSURE CUTOFF	31
ODM	OUTDOOR MOTOR	15
PPM	HEATER PLUG	27,28
TNS	TRANSFORMER, 208/230V - 24V	22
IOL	INTERNAL OVERLOAD	
CN	CONNECTOR AND WIRE NUT	

AIRE Y CLIMA ESPECIALIZADO

Figure 4. 5TCC4048

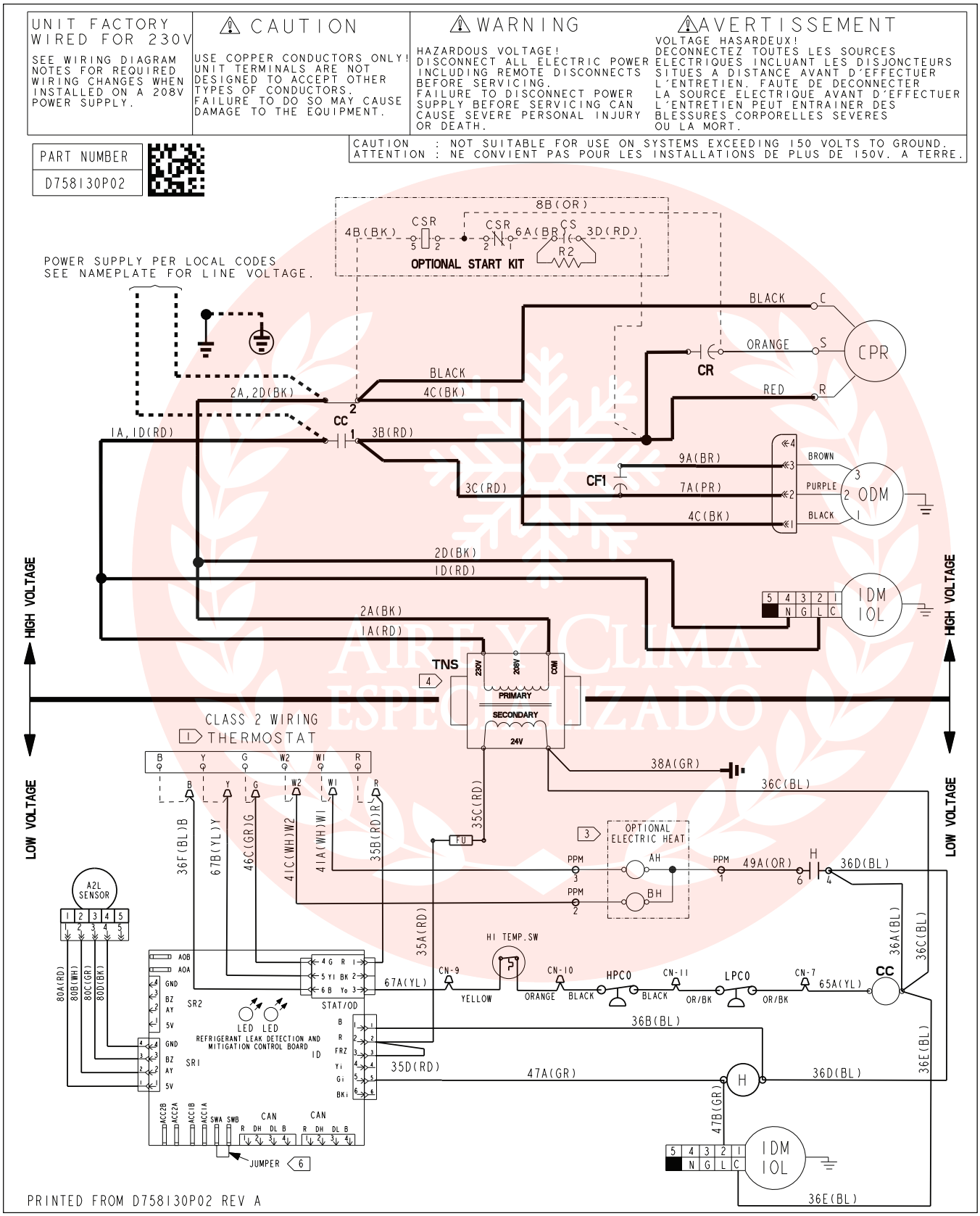

Figure 5. 5TCC4060

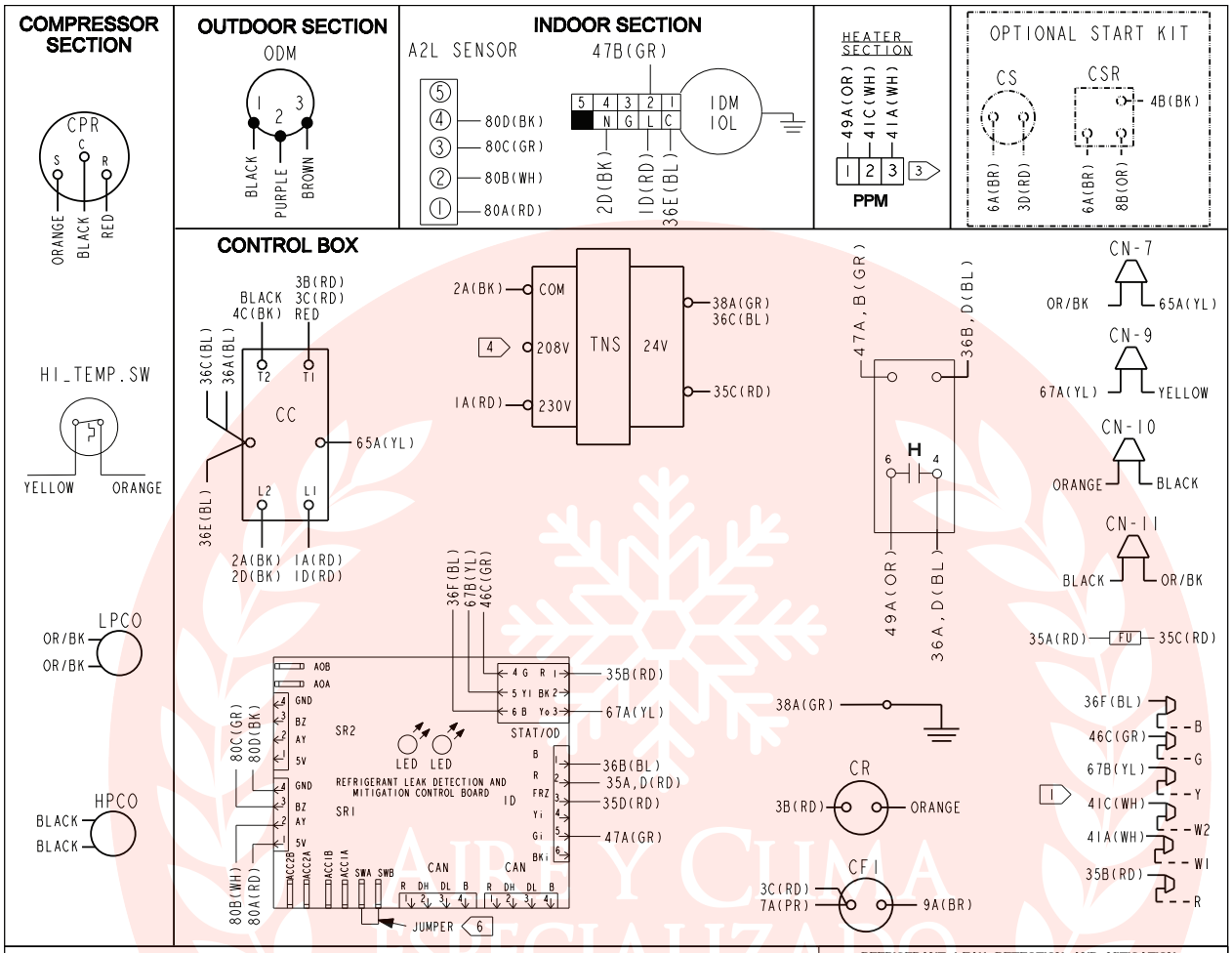

NOTES:

1. CONNECTIONS SHOWN ARE FOR A TYPICAL THERMOSTAT. SEE SCHEMATIC SUPPLIED WITH THERMOSTAT FOR PROPER CONNECTIONS. LOW VOLTAGE WIRING TO UNIT MAY BE NEC CLASS 2.
2. MAXIMUM ADDITIONAL EXTERNAL LOAD (PILOT DUTY) BETWEEN "B" AND "R" OF 0.5 AMPS, 24 VAC IS AVAILABLE WHEN A HEATER IS INSTALLED.
3. SEE WIRING DIAGRAM WITH HEATER FOR DETAILS OF HEATER WIRING.
4. FOR 208 VOLT OPERATION MAKE THE FOLLOWING WIRING CHANGES: AT TNS, REMOVE 1A(RD) WIRE AND CONNECT TO 208V TERMINAL ON THE TRANSFORMER
5. IF ANY OF THE ORIGINAL WIRE AS SUPPLIED IN THIS UNIT MUST BE REPLACED, REPLACE IT WITH APPLIANCE WIRING MATERIAL RATED AT 105°C.
6. DO NOT REMOVE JUMPER UNLESS CONFIGURING AN EXTERNAL SWITCH.

24 VOLT TRANSFORMER FUSE REPLACEMENT FU 36 VOLT TYPE ATC-5 AMP

REFRIGERANT LEAK DETECTION AND MITIGATION CONTROL BOARD GREEN LED DIAGNOSTIC INDICATOR	
OFF	NO POWER/OFF
ON	STARTUP
SLOW FLASH	NORMAL OPERATION
2 FLASH	ACTIVE ALARM - SENSOR COMMUNICATION ERROR
3 FLASH	ACTIVE ALARM - REFRIGERANT LEAK OR SENSOR FAILURE
4 FLASH	PAST REFRIGERANT DETECTED ALARM
5,6 OR 7 FLASH	PAST SENSOR COMMUNICATION OR SENSOR ERROR

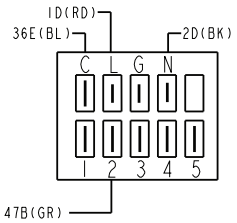

C = LOW VOLTAGE COMMON
G = ALTERNATE GROUND LOCATION
L = LINE VOLTAGE
N = NEUTRAL
1 = LOW TAP
2 = MED-LOW TAP
3 = MED-HIGH TAP
4 = HIGH TAP
5 = NOT USED

IDM CONNECTION

WIRE COLOR DESIGNATION					
ABBR	COLOR	ABBR	COLOR	ABBR	COLOR
BK	BLACK	PR	PURPLE	GR	GREEN
BL	BLUE	RD	RED	YL	YELLOW
BR	BROWN	WH	WHITE	OR	ORANGE

LEGEND		
DEVICE DESIG	DESCRIPTION	LINE NUMBER
A2L_SR	A2L SENSOR	28
AH,BH	CONTACTOR, ELECTRIC HEATER	27
CC	CONTACTOR	12,30
CFI	OUTDOOR FAN CAPACITOR	15
CPR	COMPRESSOR	11
CR	COMPRESSOR RUN CAPACITOR	11
FU	FUSE	26
H	HEATER RELAY	27,33
HI_TEMP_SW	HIGH TEMPERATURE SWITCH	30
HPCO	HIGH-PRESSURE CUTOFF	30
IDM	INDOOR MOTOR	19,36
LPCO	LOW-PRESSURE CUTOFF	30
ODM	OUTDOOR MOTOR	16
PPM	HEATER PLUG	27,28
TNS	TRANSFORMER, 208/230V - 24V	22
IOL	INTERNAL OVERLOAD	
CN	CONNECTOR AND WIRE NUT	

Figure 6. 5TCC4060

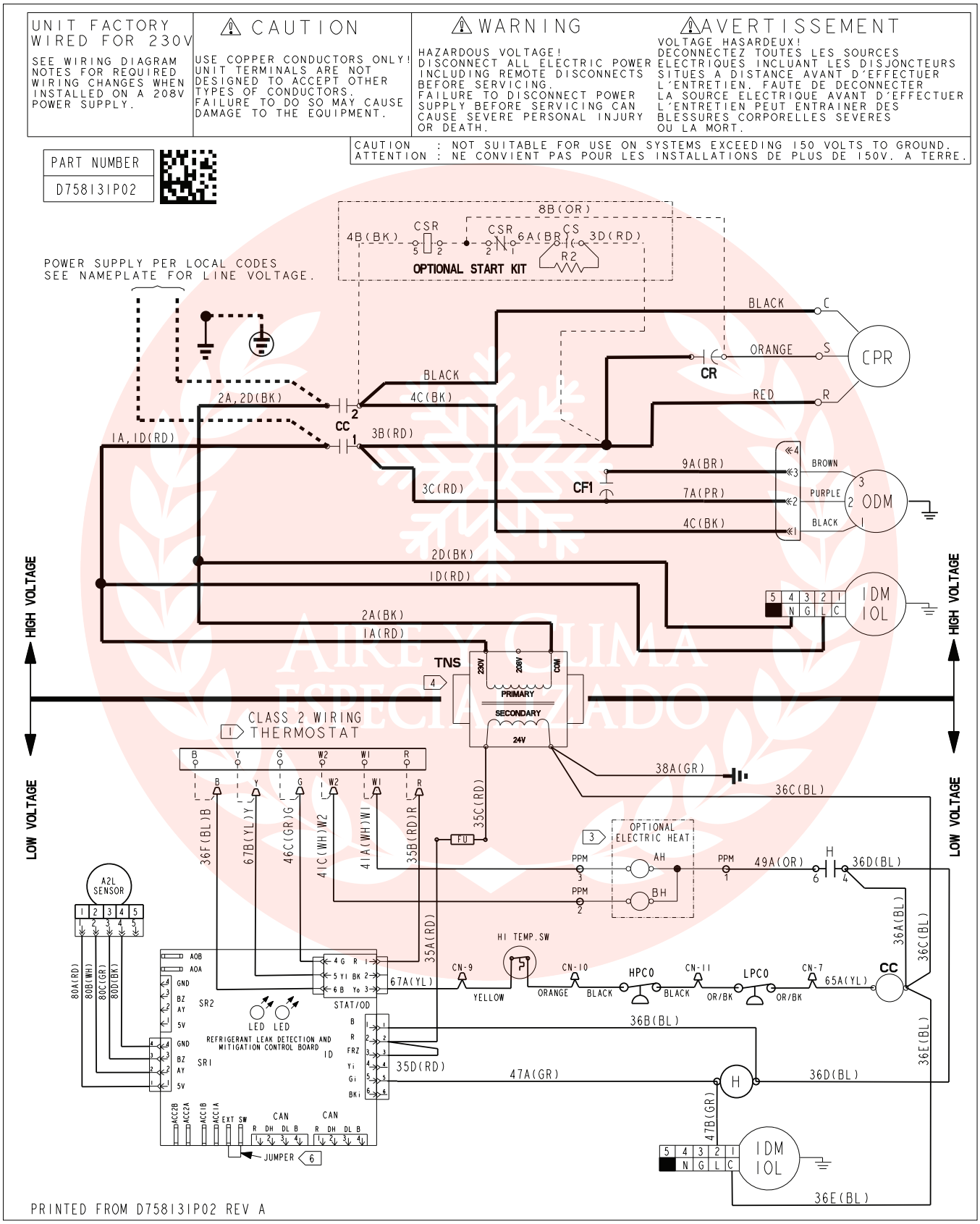

Full Perimeter Roof Mounting Curb

Figure 7. 2.0 to 3.0 ton models

BAYCURB050B Full Perimeter Roof Mounting Curb

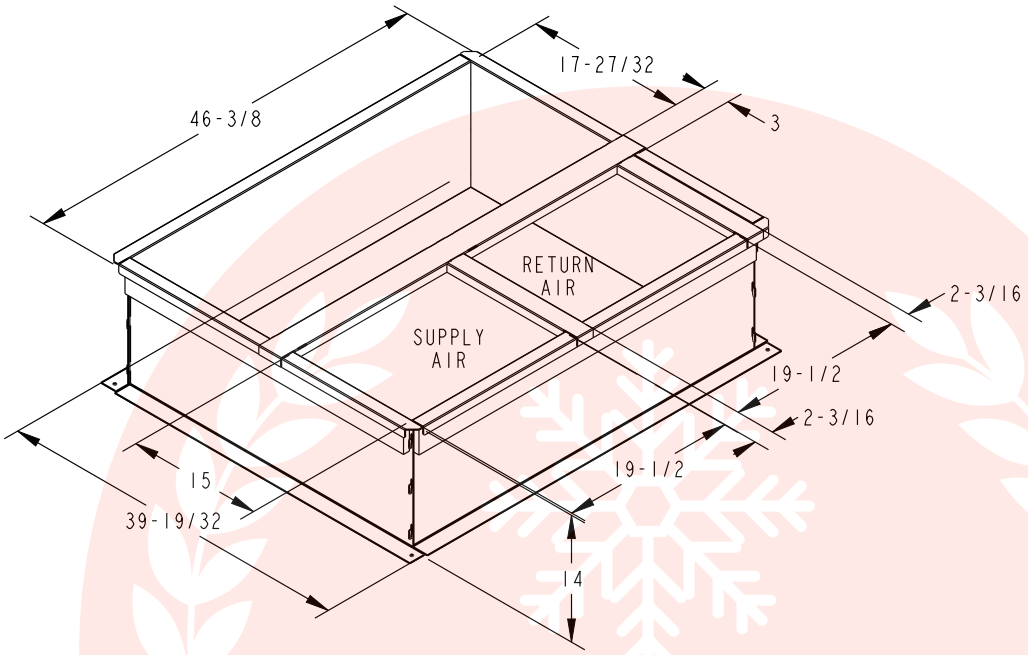

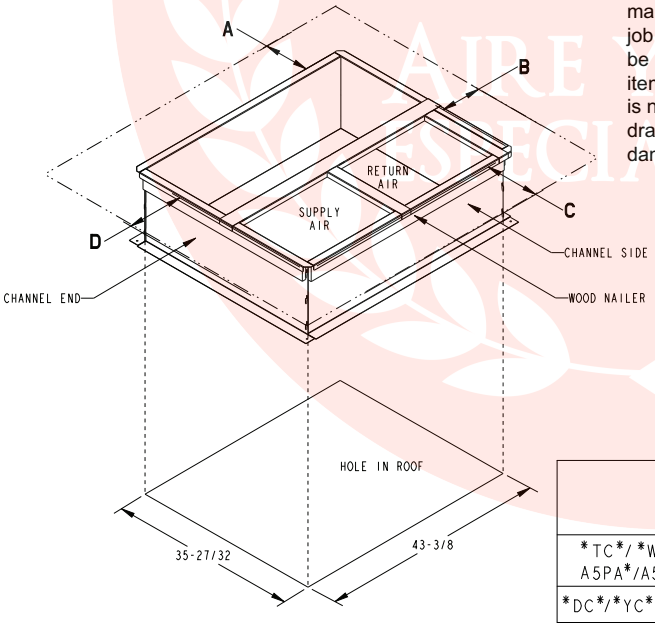

The drawings on this page are prepared by the manufacturer in order to provide detail regarding job layout only. These drawings are not intended to be used as a basis to construct, build or modify the items depicted in the drawings. The manufacturer is not responsible for the unauthorized use of these drawings and expressly disclaims any liability for damages resulting from such unauthorized use.

All dimensions are in inches

	SERVICE CLEARANCE DIMENSIONS			
	A	B	C	D
TC/*WC*/ A5PA*/A5PH*	42.00	36.00	12.00**	24.00
DC/*YC*/A5PG*	42.00	36.00	12.00**	36.00

**42.00 WITH ECONOMIZER WITH 25% FRESH AIR ACCESSORY

Figure 8. 3.5 to 5.0 ton models

BAYCURB051B Full Perimeter Roof Mounting Curb

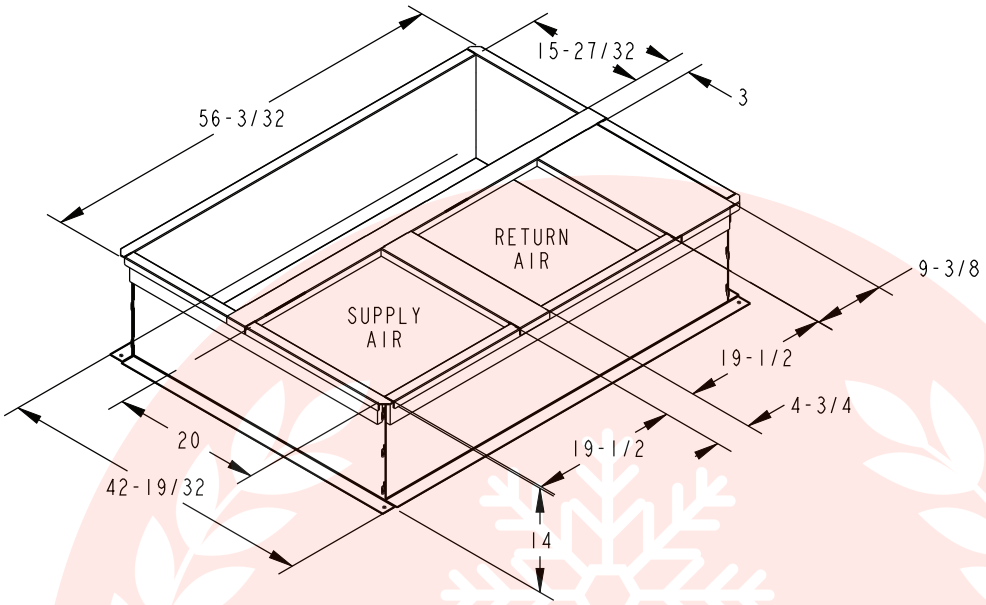

The drawings on this page are prepared by the manufacturer in order to provide detail regarding job layout only. These drawings are not intended to be used as a basis to construct, build or modify the items depicted in the drawings. The manufacturer is not responsible for the unauthorized use of these drawings and expressly disclaims any liability for damages resulting from such unauthorized use.

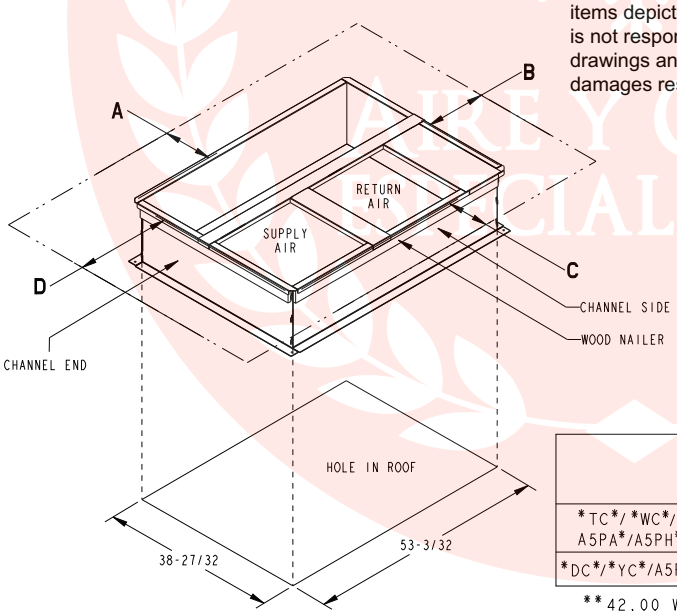

All dimensions are in inches

	SERVICE CLEARANCE DIMENSIONS			
	A	B	C	D
TC/*WC*/ A5PA*/A5PH*	42.00	36.00	12.00**	24.00
DC/*YC*/A5PG*	42.00	36.00	12.00**	36.00

**42.00 WITH ECONOMIZER WITH 25% FRESH AIR ACCESSORY

AIREY CLIMA ESPECIALIZADO

Optional Equipment — Economizer

Figure 9. BAYECON105,106A down discharge economizer and rain hood (Mounts over horizontal return air opening)

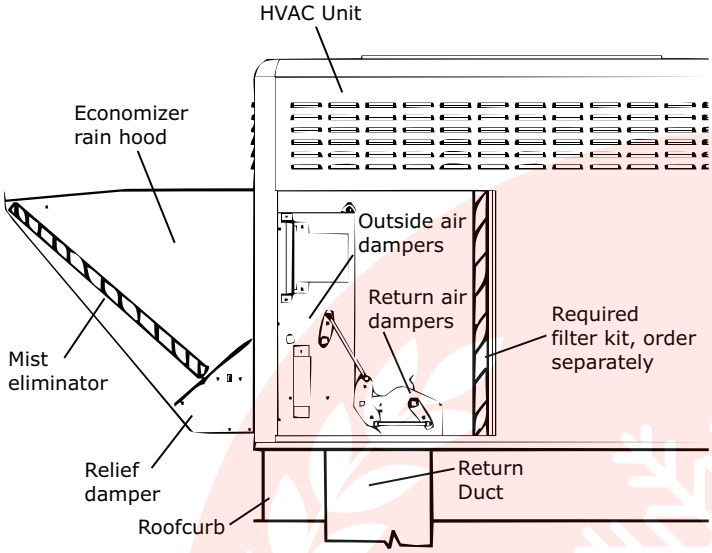

Table 11. Economizer application models

Economizer	Unit Application Models
BAYECON105A	2.0 to 3.0 Ton Models
BAYECON106A	3.5 to 5.0 Ton Models

Figure 10. BAYCON205, 206A horizontal economizer and rain hood

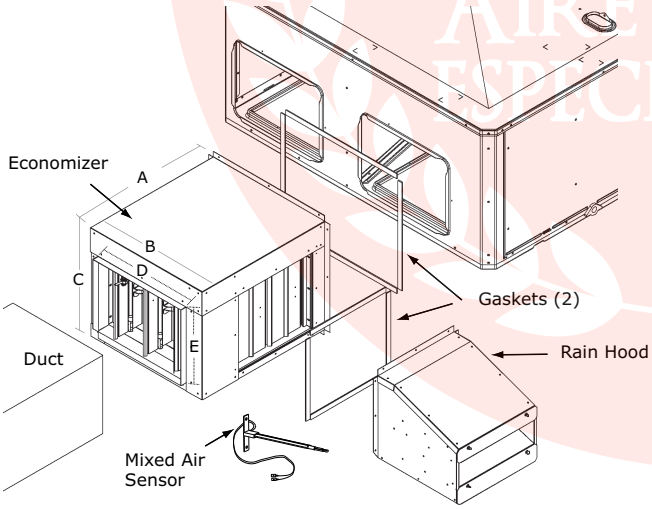

Table 12. Economizer dimension (in inches)

Economizer	Models	A	B	C	D	E	F
BAYECON205A	2.0 to 3.0 Ton	22	20	16–7/8	15–11/16	11–11/16	15
BAYECON206A	3.5 to 5.0 Ton	26	22–21/32	19	17–11/16	14–11/16	21–3/8

Note: *The drawings on this page are prepared by the manufacturer in order to provide detail regarding job layout only. These drawings are not intended to be used as a basis to construct, build or modify the items depicted in the drawings. The manufacturer is not responsible for the unauthorized use of these drawings and expressly disclaims any liability for damages resulting from such unauthorized use.*

Optional Equipment — Outside Air Damper

Figure 11. BAYOSAH001 and BAYOSAH002A outside air damper (Replaces filter/coil access panel)

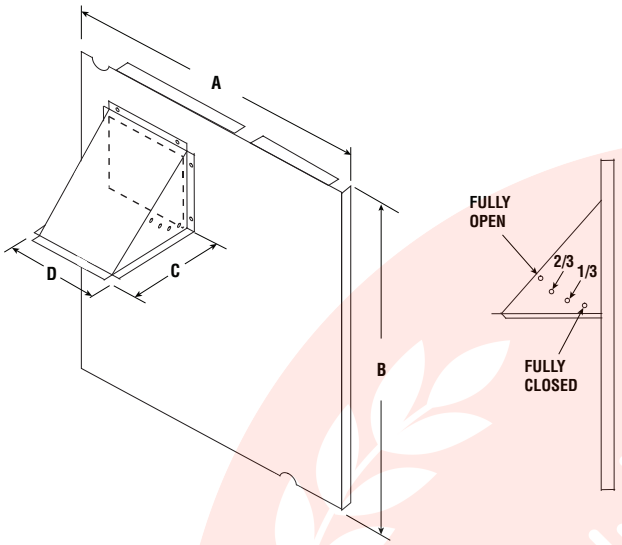

Table 13. Outside air damper dimensions (in inches)

Manual Fresh Air Model	Unit Application Models	A	B	C	D
BAYOSAH001A	2.0 to 3.0 Ton	22–7/16	20–11/16	12–3/8	9–3/16
BAYOSAH002A	3.5 to 5.0 Ton	25–3/16	20–11/16	12–3/8	9–3/16

Figure 12. BAYDMPR101 and BAYDMPR102A, 25% motorized outside air damper (Mounts over horizontal return air opening)

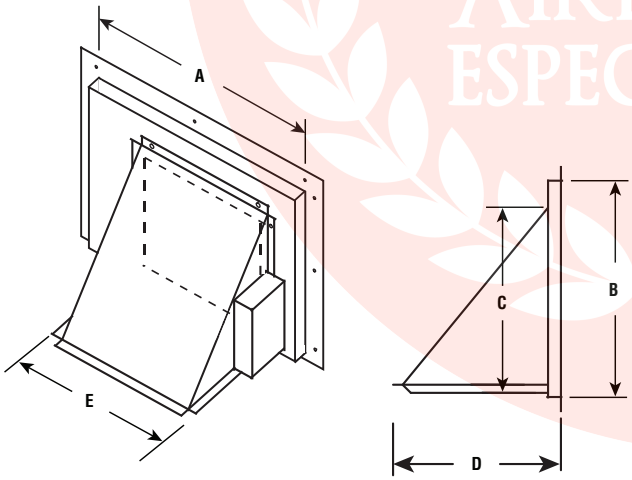

Table 14. Outside air damper dimensions (in inches)

Manual Fresh Air Model	Unit Application Models	A	B	C	D	E
BAYDMPR101A	2.0 to 3.0 Ton	15–13/16	11–13/16	10–1/4	11–1/2	12–1/4
BAYDMPR102A	3.5 to 5.0 Ton	18–3/16	15–1/8	10–1/4	11–1/2	12–1/4

Note: *The drawings on this page are prepared by the manufacturer in order to provide detail regarding job layout only. These drawings are not intended to be used as a basis to construct, build or modify the items depicted in the drawings. The manufacturer is not responsible for the unauthorized use of these drawings and expressly disclaims any liability for damages resulting from such unauthorized use.*

AIRE Y CLIMA ESPECIALIZADO

Optional Equipment — Filter Rack

Figure 13. BAYFLTR101 filter rack (2.0 to 3.0 ton models)/ BAYFLTR201 (3.5 to 5.0 ton models) (Mounts in filter/coil section)

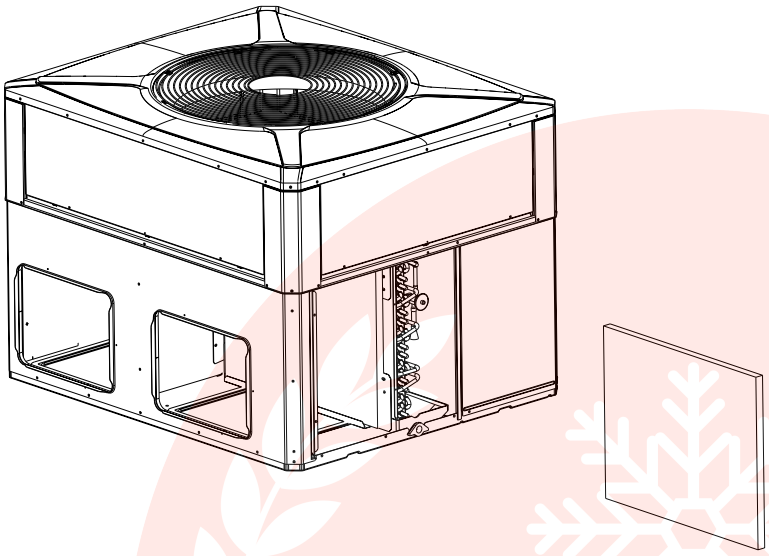

Figure 14. BAYACCDOR1A hinged filter access door (2.0 to 3.0 ton models)/ BAYACCDOR2A (3.5 to 5.0 ton models) (Replaces filter/coil access panel)

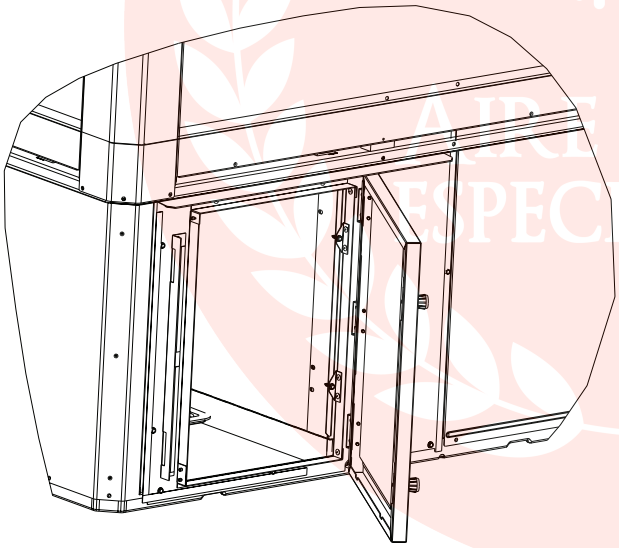

Note: *The drawings on this page are prepared by the manufacturer in order to provide detail regarding job layout only. These drawings are not intended to be used as a basis to construct, build or modify the items depicted in the drawings. The manufacturer is not responsible for the unauthorized use of these drawings and expressly disclaims any liability for damages resulting from such unauthorized use.*

AIRE Y CLIMA ESPECIALIZADO

Dimensional Data

Figure 15. Space on sides requirements

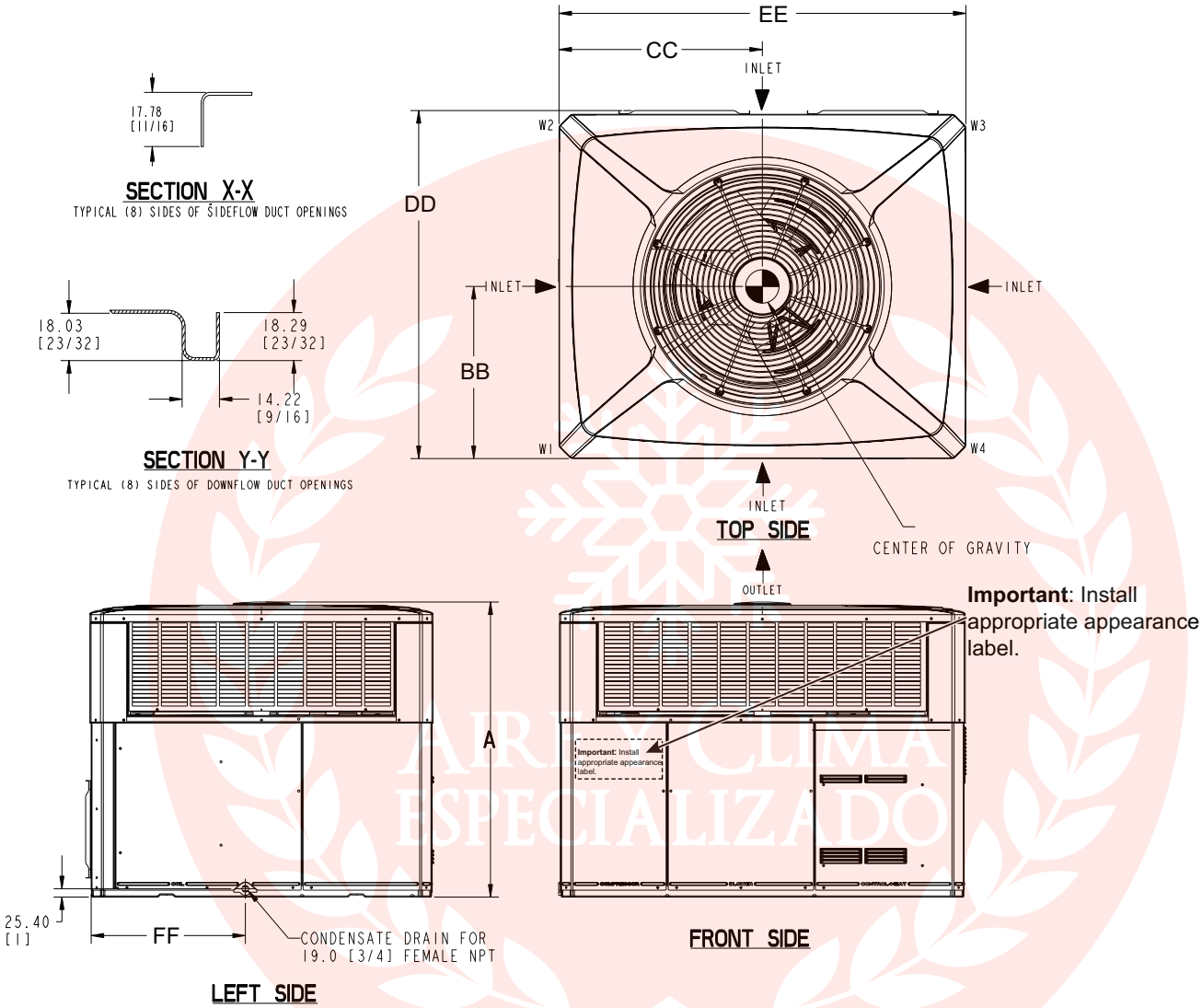

	2 - 3 TON Units		3.5 - 5 TON Units	
	RECOMMENDED SERVICE CLEARANCE mm [Inches]			
		W/ ECONOMIZER		W/ ECONOMIZER
BACK SIDE	305 [12]	762 [30]	305 [12]	762 [30]
LEFT SIDE	762 [30]	914 [36]	914 [36]	1067 [42]
RIGHT SIDE	610 [24]	-	610 [24]	-
FRONT SIDE	1067 [42]	-	762 [30]	-
	CLEARANCE TO COMBUSTIBLE MATERIAL mm [Inches]			
BOTTOM	0		0	
BACK SIDE	25 [1]		25 [1]	
LEFT SIDE	152 [6]		152 [6]	
RIGHT SIDE	152 [6]		152 [6]	
FRONT SIDE	305 [12]		305 [12]	
TOP	914 [36]		914 [36]	
	DIMENSIONS mm [Inches]			
A	HEIGHT OF UNIT - See Table 3			
BB	CENTER OF GRAVITY - See Table 4			
CC	CENTER OF GRAVITY - See Table 4			
DD -Depth	1093.72 [43-1/16]		1173.9 [46-1/4]	
EE -Width	1284.99 [50-5/8]		1535.94 [60-1/2]	
FF	497.8 [19-5/8]		576.00 [22-11/16]	

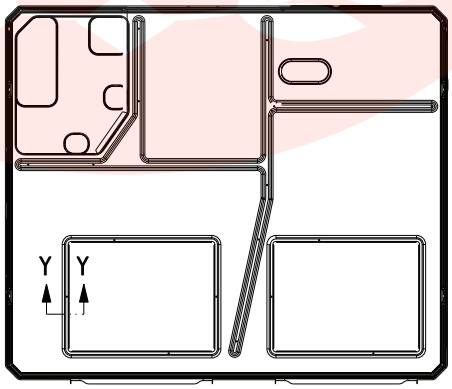

BOTTOM SIDE

Figure 16. Bottom and back duct openings

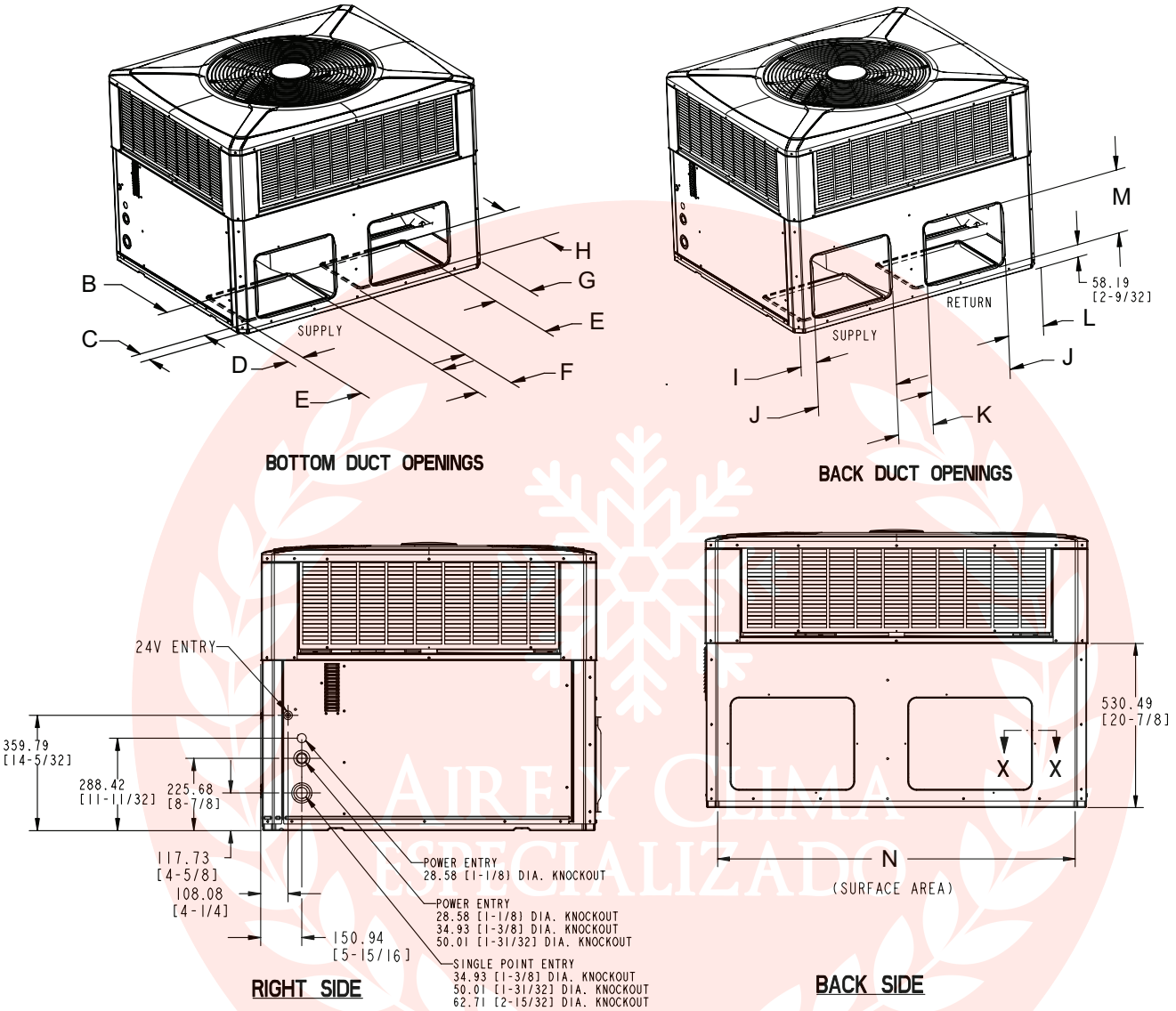

Table 15. Dimensions (mm [inch])

Model	Height-A	B	C	D	E	F	G	H	I	J	K	L	M	N
5TCC4024	898.53 [35 - 3/8]	304.80 [12.0]	92.33 [3.63]	66.51 [2.63]	406.40 [16.0]	167.89 [6.61]	173.46 [6.8]	304.80 [12.0]	48.35 [1.90]	398.22 [15.68]	176.07 [6.93]	176.68 [6.96]	296.62 [11.68]	1155.45 [45.49]
5TCC4030	949.33 [37 - 3/8]													
5TCC4036														
5TCC4042	898.53 [35 - 3/8]	457.20 [18.0]	75.41 [2.97]	74.55 [2.93]	381.00 [15.0]	244.09 [9.61]	318.75 [12.55]	381.00 [15.0]	42.44 [1.65]	449.02 [17.68]	176.07 [6.93]	321.97 [12.68]	372.82 [14.68]	1354.74 [53.34]
5TCC4048	1000.13 [39 - 3/8]													
5TCC4060														

Table 16. Weights and center of gravity

Model	Corner Weights KG [LBS]				Shipping Weight KG [LBS]	Unit Weight KG [LBS]	Center Of Gravity mm [inch]	
	W1	W2	W3	W4			BB	CC
5TCC4024	60.3 [133]	36.8 [81]	26.1 [58]	41.0 [90]	197.8 [436]	164.2 [362]	479.8 [18.9]	527.8 [20.8]
5TCC4030	63.1 [139]	38.7 [85]	27.5 [61]	43.1 [95]	205.9 [454]	172.4 [380]	406.5 [16.0]	594.1 [23.4]
5TCC4036	63.9 [141]	38.9 [86]	27.7 [61]	43.7 [96]	207.7 [458]	174.2 [384]	414.3 [16.3]	697.6 [27.5]
5TCC4042	72.7 [160]	47.2 [104]	35.2 [78]	53.6 [118]	255.8 [564]	208.7 [460]	470.0 [18.5]	731.0 [28.8]
5TCC4048	75.0 [165]	45.0 [99]	33.8 [75]	54.4 [120]	255.4 [563]	208.2 [459]	433.0 [17.0]	743.3 [29.3]
5TCC4060	79.3 [175]	46.3 [102]	34.9 [77]	59.0 [130]	266.7 [588]	219.5 [484]	414.0 [16.3]	635.0 [25.0]

AIRE Y CLIMA ESPECIALIZADO

Mechanical Specifications

General

The units shall be horizontal airflow as shipped and convertible to downflow. All units shall be factory assembled, piped, internally wired and fully charged with refrigerant. Units shall be certified to UL 60335. All units shall be factory run tested to check cooling operation, fan and blower rotation and control or TXV sequence. Units shall be designed to operate at ambient temperatures between 115°F and 55°F in cooling as manufactured. Cooling performance shall be rated in accordance with AHRI standards.

Unit Casing

All components shall be mounted in a weather-resistant steel cabinet with an enamel finish. Access panels shall be provided for unit controls and indoor coil and fans. Indoor air section compartment shall be completely insulated with fireproof, permanent, odorless fiber material. Knockouts shall be provided for utility and control connections. Drain connections shall be provided to accommodate indoor water runoff.

Compressor

The compressor shall be hermetically sealed, high efficiency scroll compressors. Internal overcurrent and over temperature protection, internal pressure relief shall be standard. Other features include centrifugal oil pump, low vibration and noise.

Refrigeration System

All units shall have refrigerant control. Service pressure tap ports and a refrigerant line filter shall be standard.

Evaporator Coil (2 to 4 Ton Models) All aluminum micro channel, extruded tubes, mechanically bonded to aluminum fins, and factory pressure tested at 480 psig and leak tested at 250 to 300 psig. All units have TXV to control refrigerant flow.

Evaporator Coil (5 Ton Model) Internally enhanced 3/8-inch OD seamless copper tubing mechanically bonded to aluminum fins, factory pressure tested at 480 psig and leak tested at 250 to 300 psig.All units have TXV to control refrigerant flow.

Condenser Coil

The Spine Fin ™ condenser coil shall be continuously wrapped, corrosion resistant all aluminum with minimum brazed joints. This coil is 3/8-inch OD seamless aluminum tubing glued to a continuous aluminum fin. Coils are lab tested to withstand 2.000 pounds of pressure per square inch. The outdoor coil provides low airflow resistance and efficient heat transfer. The coil is protected on all four sides by louvered panels.

Indoor Air Fan

Constant Torgue, forward-curved, centrifugal wheel in a Composite Vortica ® Blower housing. Motor shall have thermal overload protection and permanently lubricated motor bearings. Motor/blower assembly isolated from unit with rubber mounts.

Outdoor Fan

One direct-drive, statically and dynamically balanced propeller fan shall be used in a draw-through vertical discharge configuration. Permanently lubricated weather proof motor shall have built-in thermal overload protection.

System Controls

System controls include condenser fan, evaporator fan and compressor contactors.

Accessories Roof Curb

The roof curb shall be designed to mate with the unit and provide support and complete weathertight installation when properly installed. Adhesive back polyurethane sealing strips shall be provided to ensure an airtight seal between supply and return openings of the curb and unit. The roof curb design allows field fabricated ductwork to be connected directly to the curb. Curb ships knocked down for field assembly, and includes factory installed wood nailer strips.

Electric Heaters

Each heater assembly shall include power supply fusing if over 48 amps, automatic resetting limit switches and heat limiters for thermal protection. Heaters shall be provided with polarized plugs for quick connection to unit low voltage wiring. Electric heat modules shall be UL listed.

Single Source Power Entry

This accessory when used with electric heat accessory shall allow single source power connection to unit and heater combination. Single source power entry kits shall have specific matching heater(s). Kit shall include high voltage terminal blocks, fuse blocks and fuses, cut-to-length interconnecting wiring, and junction box (if required) to provide power sources with fuse protection as required for both the unit and accessory heater. Kit components shall install within the heater cabinet in the heater access section. Single source branch power circuit shall be protected and wired in accordance with local codes.

Fully Modulating Economizer

This accessory shall be field installed and be composed of the following items: 0–100 % fresh air damper, damper drive motor, fixed dry bulb enthalpy control, and low voltage pigtails for electrical connections. Solid state enthalpy or differential enthalpy control is optional. Economizer operations shall be controlled by the preset position of the enthalpy control. A barometric relief damper shall be standard with the economizer and provide a pressure operated damper that shall be gravity closing and prohibit entrance of outside air on equipment "off" cycle. Economizer requires BAYRLAY004B relay kit to interface the economizer to the heat pump.

Manual Outside Air Dampers

Rain hood and screen shall be field installed. Suitable for up to 25% outside air.

Start Kit

Extra compressor starting capacity for single phase equipment.

Control Options
Standard Indoor Thermostats

Two stage heating/cooling or one stage heating/cooling thermostats shall be available in either manual or automatic changeover.

Programmable Electronic Night Setting Thermostat

Programmable electronic thermostat shall provide heating setback and cooling setup with 7–day programming capability. 1H/1C or 2H/2C models available.

ARTECLIMA ESPECIALIZADO

AIRE Y CLIMA
ESPECIALIZADO

AIRE Y CLIMA
ESPECIALIZADO

AIRE Y CLIMA
ESPECIALIZADO

Trane - by Trane Technologies (NYSE: TT), a global innovator - creates comfortable, energy efficient indoor environments for commercial and residential applications. For more information, please visit trane.com or tranetechnologies.com.

AHRI CERTIFIED®
www.ahridirectory.org
Unitary Small AC
AHRI Standard 210/240
Certification applies only when the complete system is listed with AHRI.

c UL US LISTED

The AHRI Certified mark indicates Trane U.S. Inc. participation in the AHRI Certification program. For verification of individual certified products, go to ahridirectory.org.

Trane has a policy of continuous data improvement and it reserves the right to change design and specifications without notice. We are committed to using environmentally conscious print practices.

PKGR-PSD011B-EN 10 Sep 2025
Supersedes PKGR-PSD011A-EN (May 2025)

©2025 Trane